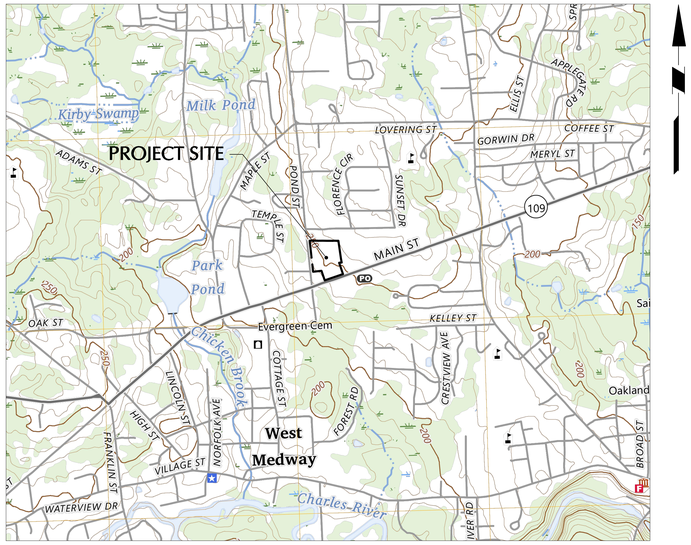
MEDWAY MUNICIPAL COMPLEX

SITE PLAN REVIEW & LAND DISTURBANCE PERMIT DRAWINGS
120 MAIN STREET
MAP: 39 LOT: 69
ZONE: CENTRAL BUSINESS (CB)
TOWN OF MEDWAY, NORFOLK COUNTY, MASSACHUSETTS

CIVIL DRAWING INDEX

SHEET NUMBER	DRAWING TITLE	DATE	LAST REVISED
CS001	SITE COVER SHEET	07/20/2026	09/18/2026
CS002	MASTER LEGEND & NOTES	07/20/2026	09/18/2026
CS003	SITE CONTEXT SHEET	09/18/2026	
VB101	BOUNDARY & TOPOGRAPHIC SURVEY	06/12/2026	
VB102	BOUNDARY & TOPOGRAPHIC SURVEY	06/12/2026	
CD101	SITE PREPARATION PLAN	07/20/2026	09/18/2026
CS101	SITE PLAN	07/20/2026	09/18/2026
CS102	SITE PLAN ENLARGEMENT	07/20/2026	09/18/2026
CS501	SITE DETAILS I	07/20/2026	09/18/2026
CS502	SITE DETAILS II	07/20/2026	09/18/2026
CS503	SITE DETAILS III	07/20/2026	09/18/2026
CS504	SITE FEATURE DETAILS I	07/20/2026	09/18/2026
CS505	SITE FEATURE DETAILS II	07/20/2026	09/18/2026
CG101	GRADING PLAN	07/20/2026	09/18/2026
CG201	DRAINAGE PLAN	07/20/2026	09/18/2026
CG501	GRADING & DRAINAGE DETAILS I	07/20/2026	09/18/2026
CG502	GRADING & DRAINAGE DETAILS II	07/20/2026	09/18/2026
CG503	GRADING & DRAINAGE DETAILS III	07/20/2026	09/18/2026
CU101	UTILITY PLAN	07/20/2026	09/18/2026
CU501	UTILITY DETAILS	07/20/2026	09/18/2026
CE101	SOIL EROSION & SEDIMENT CONTROL PLAN	07/20/2026	09/18/2026
CE501	SOIL EROSION & SEDIMENT CONTROL PLAN DETAILS	07/20/2026	09/18/2026
LL101	SITE LIGHTING PLAN	07/20/2026	09/18/2026
LL501	SITE LIGHTING DETAILS	07/20/2026	09/18/2026
LP101	PLANTING PLAN	07/20/2026	09/18/2026
LP501	PLANTING DETAILS AND NOTES	07/20/2026	09/18/2026
TM101	FIRE TURNING MOVEMENTS	07/20/2026	09/18/2026
TM102	TRASH & DELIVERY TURNING MOVEMENTS	07/20/2026	09/18/2026
TM103	SIGHT TRIANGLES	07/20/2026	09/18/2026
A1.10	LEVEL 1 OVERALL PLAN	07/20/2026	09/18/2026
A1.11	LEVEL 1 – AREA A	07/20/2026	09/18/2026
A1.12	LEVEL 1 – AREA B	07/20/2026	09/18/2026
A1.20	LEVEL 2 OVERALL PLAN	07/20/2026	09/18/2026
A1.21	LEVEL 2 & MEZZANINE – AREA A	07/20/2026	09/18/2026
A1.22	LEVEL 2 – AREA B	07/20/2026	09/18/2026
A1.30	LEVEL 3 OVERALL PLAN	07/20/2026	09/18/2026
A1.31	EQUIP. PLATFORM – AREA A	07/20/2026	09/18/2026
A1.32	LEVEL 3 – AREA B	07/20/2026	09/18/2026
A4.00	AXONOMETRIC VIEWS	07/20/2026	09/18/2026
A4.11	EXTERIOR ELEVATIONS	07/20/2026	09/18/2026
A4.12	EXTERIOR ELEVATIONS	07/20/2026	09/18/2026
A4.12	EXTERIOR ELEVATIONS	07/20/2026	09/18/2026
A4.13	EXTERIOR ELEVATIONS	07/20/2026	09/18/2026
A4.14	EXTERIOR ELEVATIONS	07/20/2026	09/18/2026



MAP REFERENCE: USGS HOLLISTON QUADRANGLE (7.5-MINUTE SERIES)

LOCATION MAP

SCALE: 1" = 1000'

RELEASE DATES

DATE	ISSUED FOR
07/20/2026	PERMIT SUBMISSION
09/18/2026	PEER REVIEW COMMENT RESPONSE

DECISION DATE: _____

ENDORSEMENT DATE: _____

_____

_____

_____

_____

_____

MEDWAY PLANNING & ECONOMIC DEVELOPMENT BOARD

I CERTIFY THAT 20 DAYS HAVE ELAPSED SINCE PLANNING BOARD APPROVAL AND NO APPEAL HAS BEEN FILED IN THIS OFFICE

DATE: _____

_____ STEFANY GRUNGO, TOWN CLERK

OWNER
TOWN OF MEDWAY
155 VILLAGE STREET
MEDWAY, MA 02053

OWNER'S PROJECT MANAGER
COLLIERS
PHIL PALUMBO
67 HUNT STREET, SUITE 205
AGAWAM, MA 01001
PHONE: 413-930-4369

CIVIL ENGINEER, LANDSCAPE ARCHITECT, SURVEY, & GEOTECHNICAL ENGINEER
LANGAN ENGINEERING & ENVIRONMENTAL SERVICES
JOHN PERRY
100 CAMBRIDGE STREET, SUITE 1310
BOSTON, MA 02114
PHONE: 617-824-9100

ARCHITECT
DORE + WHITTIER
CHIP HEITKAMP
260 MERRIMAC STREET BUILDING 7, 2ND FLOOR
NEWBURYPORT, MA 01950
PHONE: 978-499-2999

TRAFFIC ENGINEER
VANASSE & ASSOCIATES, INC
STEPHAN ZAETS
35 NEW ENGLAND BUSINESS CENTER DRIVE,
SUITE 140
ANDOVER, MA 01810
PHONE: 978-499-2999

CONSTRUCTION MANAGER
CONSIGLI CONSTRUCTION CO., INC
72 SUMMER STREET
MILFORD, MA 01757
PHONE: 508-377-4075

LANGAN

Date: 9/21/2026 Time: 02:58 User: hschur Style Table: Langan.stb Layout: CS001 Document Code: 151072201-0301-CS001-0102

CONTRACTOR NOTES

1. THESE PLANS REPRESENT THE OVERALL SITEWORK IMPROVEMENTS REQUIRED FOR PROJECT CONSTRUCTION. THE CONTRACTOR SHALL FURNISH, INSTALL, TEST AND COMPLETE ALL WORK TO THE SATISFACTION OF THE ENGINEER AND OWNER IN ACCORDANCE WITH THE CONTRACT DOCUMENTS. THE CONTRACTOR IS SOLELY RESPONSIBLE FOR MEANS AND METHODS OF CONSTRUCTION; AS SUCH, THESE PLANS DO NOT COMPLETELY REPRESENT, NOR ARE THEY INTENDED TO REPRESENT, ALL SPECIFIC INSTRUCTIONS REQUIRED FOR SITEWORK CONSTRUCTION. THE CONTRACTOR IS RESPONSIBLE TO CONSTRUCT ALL IMPROVEMENTS DEPICTED ON THESE PLANS IN ACCORDANCE WITH ALL APPLICABLE RULES, REGULATIONS AND LAWS IN EFFECT AT THE TIME OF CONSTRUCTION.
2. THE CONTRACTOR SHALL ACCEPT THE SITE AS IS. THE CONTRACTOR SHALL ASSESS CONDITIONS, AND THE KIND, QUALITY AND QUANTITY OF WORK REQUIRED. THE OWNER AND ENGINEER MAKES NO GUARANTEE IN REGARD TO THE ACCURACY OF ANY INFORMATION THAT WAS OBTAINED DURING INVESTIGATIONS. THE CONTRACTOR SHALL: MAKE A THOROUGH SITE INSPECTION IN ORDER TO FIELD CHECK EXISTING SITE CONDITIONS; CORRELATE CONDITIONS WITH THE DRAWINGS; AND, RESOLVE ANY POSSIBLE CONSTRUCTION CONFLICTS WITH THE OWNER AND ENGINEER PRIOR TO COMMENCEMENT OF WORK. THE CONTRACTOR SHALL PERFORM ADDITIONAL TOPOGRAPHIC SURVEYS HE/SHE DEEMS NECESSARY, PROVIDED THEY ARE COORDINATED WITH THE OWNER. ANY CONDITIONS DETERMINED BY THE CONTRACTOR THAT DIFFER FROM THE INFORMATION SHOWN ON THE DRAWINGS THAT ARE NOT BROUGHT TO THE ATTENTION OF THE OWNER AND ENGINEER PRIOR TO THE START OF WORK SHALL NOT BE CONSIDERED GROUNDS FOR ADDITIONAL PAYMENT OR CHANGES TO THE CONTRACT DURATION, OR ANY OTHER CLAIMS AGAINST THE OWNER OR OWNER'S ENGINEER.
3. THE CONTRACTOR SHALL, WHEN HE/SHE DEEMS NECESSARY, PROVIDE A WRITTEN REQUESTS FOR INFORMATION (RFI) TO THE OWNER AND/OR OWNER'S DESIGNATED REPRESENTATIVE, AND ENGINEER PRIOR TO THE CONSTRUCTION OF ANY SPECIFIC SITEWORK ITEM. THE (RFI) SHALL BE IN A FORM ACCEPTABLE TO OWNER AND/OR OWNER'S DESIGNATED REPRESENTATIVE, AND ENGINEER AND SHALL ALLOW FOR A MINIMUM OF THREE WORK DAYS FOR A WRITTEN REPLY. RFIS SHALL BE NUMBERED CONSECUTIVELY BY DATE SUBMITTED. THE CONTRACTOR SHALL BE SOLELY RESPONSIBLE FOR SITEWORK ITEMS CONSTRUCTED DIFFERENTLY THAN INTENDED OR AS DEPICTED ON THE PLANS.
4. INFORMATION RELATED TO ELEVATIONS AND PROPOSED UTILITIES (SUCH AS ROADWAY GRADES, INVERT ELEVATIONS, RIM ELEVATIONS, GRATE ELEVATIONS, BUILDING FINISHED FLOOR ELEVATIONS, ETC.) MAY BE FOUND IN MORE THAN ONE LOCATION IN THE CONTRACT DOCUMENTS. THE CONTRACTOR SHALL SUFFICIENTLY REVIEW ALL PLANS, PROFILES AND ANY OTHER INFORMATION IN THE CONTRACT DOCUMENTS FOR CONSISTENCY PRIOR TO BID. ANY INCONSISTENCIES OR DISCREPANCIES THAT ARE FOUND BY THE CONTRACTOR OR HIS ASSIGNS SHALL BE IMMEDIATELY BROUGHT TO THE ATTENTION OF THE OWNER AND ENGINEER IN WRITING, IN THE FORMAT OF AN RFI PRIOR TO BID.
5. THERE ARE ADDITIONAL NOTES, SPECIFICATIONS AND REQUIREMENTS CONTAINED THROUGHOUT THE PLAN SET AS WELL AS REFERENCES TO SPECIFICATIONS FROM APPLICABLE GOVERNING AUTHORITIES AND INDUSTRY STANDARDS. IT IS THE CONTRACTOR'S RESPONSIBILITY TO OBTAIN, REVIEW AND ADHERE TO ALL THESE DOCUMENTS.
6. CONTRACTOR IS SPECIFICALLY CAUTIONED THAT ALL CONSTRUCTION STAKEOUT FOR THIS PROJECT MUST BE COMPLETED FROM THE SITE SPECIFIC SURVEY CONTROL (HORIZONTAL AND VERTICAL) UPON WHICH THE DESIGN IS BASED. THE CONTRACTOR SHOULD NOT RELY ON OR RE-ESTABLISH SURVEY CONTROL BY GPS OR OTHER METHODS FOR USE IN CONSTRUCTION STAKEOUT OR ANY OTHER PURPOSE FOR THIS PROJECT. ANY DISCREPANCIES BETWEEN THE EXISTING HORIZONTAL OR VERTICAL DATA SHOWN ON THESE DRAWINGS AND THAT ENCOUNTERED IN THE FIELD MUST BE REPORTED TO THE DESIGN TEAM PRIOR TO CONSTRUCTION FOR RESOLUTION.

ACCESSIBILITY NOTES

1. WALKWAYS ALONG ACCESSIBLE ROUTES NOT TO EXCEED 5% RUNNING SLOPE AND 2% CROSS SLOPE.
2. ALL ADA PARKING SPACES AND PASSENGER LOADING ZONES SHALL NOT EXCEED 2% IN ANY DIRECTION.
3. ALL ADA EGRESSES SHALL BE FLUSH WITH ADJOINING MATERIAL UNLESS NOTED OTHERWISE.
4. ALL RAMPS SHALL NOT EXCEED 1:12 AND 2% CROSS SLOPE.
5. CONTRACTOR SHALL CONFIRM FIELD CONDITIONS ARE CONSISTENT WITH CONSTRUCTION DOCUMENTS AND NOTIFY LANGAN ENGINEERING & ENVIRONMENTAL SERVICES, INC. OF ANY COMPLIANCE ISSUES PRIOR TO CONSTRUCTION.

UTILITY NOTES

1. THE CONTRACTOR SHALL BE RESPONSIBLE FOR INSTALLATION OF THE DOMESTIC AND FIRE SERVICE LINE CONNECTIONS TO EXISTING MAINS.
2. TEST PITS ARE TO BE PERFORMED PRIOR TO INSTALLATION OF DOMESTIC AND FIRE SERVICE LINE CONNECTIONS TO CONFIRM THE SIZE AND MATERIAL OF THE MAIN.
3. TAPPING SLEEVES AND GATE VALVE ASSEMBLIES SHALL BE INSTALLED AT EACH DOMESTIC AND FIRE SERVICE LINE CONNECTION AND SHALL MEET ALL APPLICABLE MEDWAY STANDARDS.
4. SCHEDULING OF ALL DOMESTIC AND FIRE SERVICE LINE CONNECTION WORK SHALL BE COORDINATED WITH THE TOWN OF MEDWAY TO ALLOW FOR A REPRESENTATIVE FROM THE AGENCY TO BE ONSITE TO OVERSEE THE CONNECTIONS AND PERFORM A WATER SHUTDOWN AS NEEDED.
5. THE EQUIPMENT AND MATERIALS FOR THE WATER METER VAULT AND APPURTENANCES SHALL BE SUBMITTED TO THE TOWN OF MEDWAY FOR REVIEW AND APPROVAL PRIOR TO CONSTRUCTION.
6. ALL WATER MAINS AND SERVICES SHALL HAVE A MINIMUM OF 5' OF COVER. INSULATION SHALL BE USED FOR ANY MAINS AND SERVICES RECEIVING LESS THAN 5' OF COVER. INSULATION SHALL BE 2" THICK, "FOAMGLASS" STYLE WITH JACKETING AS MANUFACTURED BY PITTSBURGH CORNING CORP IN ACCORDANCE WITH AWWA C552.
7. ALL WATER MAINS AND SERVICES SHALL MAINTAIN A MINIMUM VERTICAL SEPARATION OF 18" FROM OTHER UTILITIES WITH STRICT ADHERENCE TO THIS SEPARATION FOR SEWER AND DRAIN LINES IN ACCORDANCE WITH MASSDEP'S GUIDELINES AND POLICIES FOR PUBLIC WATER SYSTEMS. IF ADEQUATE SEPARATION IS NOT MAINTAINED, PIPELINES SHALL BE SLEEVED OR ENCASED IN FLOWABLE AND EXCAVATABLE CONCRETE. IN ADDITION, NO WATER MAINS OR SERVICES SHALL BE INSTALLED WITHIN THE SAME TRENCH AS OTHER UTILITIES. A MINIMUM OF 10' OF HORIZONTAL SEPARATION FROM SEWER OR DRAIN LINES SHALL BE MAINTAINED.
8. WATER FLOW ISOLATION VALVES & HYDRANTS SHALL MEET ALL APPLICABLE MEDWAY STANDARDS.
9. VALVE BOXES SHALL BE CAST IRON, ADJUSTABLE SLIDING HEAVY PATTERN TYPE WITH FLANGE ON THE TOP OF THE SECTION, BE STAMPED "WATER" ON THE TOP COVER, BE DIRT-TIGHT, AND FULLY ENCLOSE THE VALVE OPERATING NUT AND STUFFING BOX.
10. ALL FIRE HYDRANTS SHALL RECEIVE AN ISOLATION VALVE ALONG THE HYDRANT LATERAL AND A MINIMUM OF TWO PROTECTIVE BOLLARDS.
11. THE DEVELOPER SHALL PROVIDE AS-BUILT RECORD DRAWINGS OF ALL NEW AND EXISTING WATER INFRASTRUCTURE TO THE TOWN OF MEDWAY AT THE COMPLETION OF CONSTRUCTION.
12. FORCE MAINS SHALL HAVE AIR RELEASE VALVES AT ANY HIGH POINTS AND CLEANOUTS AT ANY LOW POINTS.
16. WATER MAINS SHALL BE PRESSURE TESTED IN ACCORDANCE WITH AWWA C600 FOR THE 2-HOUR 200 PSI TEST. BACTERIOLOGICAL SAMPLING AND TESTING SHALL BE COMPLETED BY THE WATER DIVISION. ALL TESTING SHALL BE COMPLETED BEFORE THE WATER MAIN IS PUT INTO SERVICE. THE WATER DIVISION SHALL WITNESS THE PRESSURE TEST AND BACTERIA SAMPLING. A COPY OF THE BACTERIA TEST SHALL BE SENT TO THE WATER DIVISION FROM A MASSACHUSETTS DEP STATE CERTIFIED LABORATORY CERTIFIED FOR TOTAL AND FECAL COLIFORM ANALYSES OF POTABLE WATER.
17. THE DEVELOPER SHALL SUBMIT AN AS-BUILT PLAN, GATE TIE CARDS, AND WATER SERVICE CARDS, PREPARED BY A REGISTERED CIVIL ENGINEER IN THE STATE OF MASSACHUSETTS TO THE TOWN OF MEDWAY AT THE CONCLUSION OF THE PROJECT.
18. ALL NEW CONSTRUCTION OR ALL CEMENT LINED DUCTILE IRON JOINTS AT FITTINGS (CLASS 52), VALVES AND HYDRANT LATERALS SHALL BE MECHANICAL WITH NEOPRENE GASKETS. JOINTS AT OTHER LOCATIONS SHALL BE PUSH-ON TYPE WITH NEOPRENE OR SYNTHETIC RUBBER GASKETS. ALL WATER GATES SHALL OPEN PER MUNICIPAL REQUIREMENTS. ALL WATER LINES SHALL HAVE A MINIMUM OF 5' OF GROUND COVER AND A MINIMUM SEPARATION OF 10' FROM THE SEWER SYSTEM. AT WATER AND SEWER CROSSINGS, THE SEWER LINE SHALL BE ENCASED IN 6" OF CONCRETE FOR A DISTANCE OF 10' ON EITHER SIDE OF THE CROSSING.
19. ENSURE ALL EXISTING (TO REMAIN) AND PROPOSED MANHOLES PROPERLY IDENTIFY UTILITIES SERVICED.
20. WHERE AN EXISTING UTILITY IS FOUND TO BE IN CONFLICT WITH THE PROPOSED WORK, THE CONTRACTOR SHALL ACCURATELY DETERMINE THE LOCATION, ELEVATION, AND SIZE OF THE UTILITY AND TRANSMIT THIS INFORMATION TO THE ENGINEER WITHOUT DELAY.
21. THE LOCATIONS OF EXISTING ELECTRICAL LINES AND GAS MAINS ARE APPROXIMATE. THE CONTRACTOR MUST CONSULT THE LOCAL UTILITY COMPANIES FOR ADDITIONAL INFORMATION. ALL PROPOSED GAS AND ELECTRICAL WORK SHALL BE IN CONFORMANCE WITH LOCAL COUNTY, STATE AND FEDERAL GUIDELINES AND REQUIREMENTS.

GENERAL NOTES

1. PLANIMETRIC AND TOPOGRAPHIC INFORMATION SHOWN HEREON HAS BEEN OBTAINED FROM GROUND SURVEYS BY LANGAN ON JUNE 12, 2026.
2. THE SITE LIES IN ZONE X AS SHOWN ON THE "FLOOD INSURANCE RATE MAPS" TOWN OF MEDWAY, FEMA MAP NUMBERS 25021C0143F EFFECTIVE 7/8/2025.
3. THE CONTRACTOR IS RESPONSIBLE FOR CONTACTING DIG SAFE (WWW.DIGSAFE.COM), EXCAVATION TEST HOLES, PERFORMING TEST BORINGS, AND PERFORMING WHATEVER ADDITIONAL INVESTIGATION NECESSARY TO PROTECT AND MAINTAIN ALL EXISTING UTILITIES TO REMAIN THROUGHOUT THE CONSTRUCTION PERIOD. ANY CONFLICTS BETWEEN EXISTING UTILITIES AND PROPOSED UTILITIES DISCOVERED DURING CONSTRUCTION SHALL BE PROMPTLY REPORTED TO THE PROJECT ENGINEER.
4. CONTRACTOR SHALL PREVENT DUST, SEDIMENT AND DEBRIS FROM EXITING THE SITE AND SHALL BE RESPONSIBLE FOR CLEANUP, REPAIRS AND CORRECTIVE ACTION IF SUCH OCCURS. ADJOINING STREETS AND PROPERTIES TO BE KEPT FREE OF DEBRIS RESULTING FROM DEMOLITION AND SHALL BE CLEANED ON A DAILY BASIS OR AS NEEDED.
5. DUST CONTROL TREATMENTS SHALL BE APPLIED AS NECESSARY TO CONTROL AND REDUCE THE AMOUNT OF DUST WHICH MAY CAUSE OFF-SITE DAMAGE, BE A HEALTH HAZARD TO HUMANS, WILDLIFE AND PLANT LIFE, OR POSE A HAZARD TO TRAFFIC SAFETY.
6. PROPOSED SITE WORK IMPROVEMENTS SHALL CONFORM TO THE STANDARD DETAILS AND SPECIFICATIONS OF THE TOWN OF MEDWAY. IN THE ABSENCE OF LOCAL STANDARDS, SITE WORK SHALL CONFORM TO THE REQUIREMENTS OF MASSACHUSETTS DOT STANDARD DETAILS.
7. THE CONTRACTOR IS SPECIFICALLY CAUTIONED THAT THE LOCATION AND/OR ELEVATION OF EXISTING UTILITIES AS SHOWN ON THESE PLANS IS BASED ON RECORDS OF THE VARIOUS UTILITY COMPANIES, AND WHERE POSSIBLE MEASUREMENTS TAKEN IN THE FIELD. THE INFORMATION IS NOT TO BE RELIED UPON AS BEING EXACT OR COMPLETE. THE CONTRACTOR MUST CALL THE APPROPRIATE UTILITY COMPANY AT LEAST 48 HOURS BEFORE ANY EXCAVATION TO REQUEST EXACT FIELD LOCATION OF UTILITIES. IT SHALL BE THE RESPONSIBILITY OF THE CONTRACTOR TO RELOCATE ALL UTILITIES WHICH CONFLICT WITH THE PROPOSED IMPROVEMENTS SHOWN ON THE PLANS. ANY DISCREPANCIES DISCOVERED DURING THE COURSE OF CONSTRUCTION SHALL BE PROMPTLY REPORTED TO THE PROJECT ENGINEER.
8. ANY UTILITY EASEMENTS REQUIRED BY ANY OF THE VARIOUS UTILITY COMPANIES, THE CONTRACTOR SHALL OBTAIN, EXECUTE, AND RECORD PRIOR TO ANY OF THE AFFECTED UTILITY WORK BEING PERFORMED.
9. ALL IMPROVEMENTS CONSTRUCTED IN THE TOWN PUBLIC RIGHT-OF-WAY SHALL CONFORM TO TOWN OF MEDWAY STANDARD DETAILS. IN THE ABSENCE OF LOCAL DETAILS & REQUIREMENTS AND WORK IN THE STATE RIGHT-OF-WAY SHALL COMPLY WITH THE LATEST COMMONWEALTH OF MASSACHUSETTS DEPARTMENT OF TRANSPORTATION STANDARD SPECIFICATIONS FOR HIGHWAYS AND BRIDGES AND THE MASSACHUSETTS DEPARTMENT OF TRANSPORTATION HIGHWAYS DIVISION SUPPLEMENTAL SPECIFICATIONS.
10. FOR AREAS OUTSIDE THE PROPERTY LINES, REPAIR AND/OR REPLACE ALL DAMAGE DONE TO EXISTING ELEMENTS (SIDEWALKS, PAVING, LANDSCAPING, ETC) AS REQUIRED BY OWNER AND/OR GOVERNING AUTHORITY.
11. SEE ARCHITECTURAL DRAWINGS FOR LOCATIONS, DIMENSIONS AND DETAILS OF ALL DOORS, RAMPS, SIDEWALKS AND WALLS ASSOCIATED WITH THE BUILDING.
12. ALL SIGNS AND PAVEMENT MARKINGS SHALL CONFORM TO THE LATEST EDITION OF THE MUTCD AND MASSACHUSETTS DEPARTMENT OF TRANSPORTATION REGULATIONS.
13. THE LOCATION OF EXISTING UNDERGROUND UTILITIES SHOWN HEREON IS TAKEN FROM DESIGN PLANS, AS-BUILT SKETCHES, EXISTING UTILITY COMPANY RECORDS, AND OTHER SOURCES OF INFORMATION AND IS NOT TO BE CONSTRUED AS AN ACCURATE "AS-BUILT" SURVEY AND IS SUBJECT TO SUCH CORRECTIONS THAT A MORE ACCURATE SURVEY MAY DISCLOSE.IN ADDITION, OTHER UTILITIES NOT SHOWN HEREON MAY BE PRESENT. ANY DISCREPANCIES DISCOVERED DURING THE COURSE OF CONSTRUCTION SHALL BE PROMPTLY REPORTED TO THE PROJECT ENGINEER.
14. ALL UTILITY WORK SHALL BE PERFORMED IN ACCORDANCE WITH THE REQUIREMENTS AND SPECIFICATIONS/DETAILS OF THE UTILITY COMPANY HAVING AUTHORITY OVER THE PROPOSED WORK. ALL PROPOSED UTILITY WORK SHALL BE PERFORMED IN ACCORDANCE WITH ALL APPLICABLE LOCAL, STATE, AND FEDERAL ORDINANCES/REQUIREMENTS GOVERNING THE PROPOSED WORK.
15. ALL PROPOSED UTILITIES WILL BE LOCATED UNDERGROUND UNLESS OTHERWISE NOTED.
16. RESET ALL EXISTING SANITARY AND DRAINAGE STRUCTURES TO MASSACHUSETTS STATE STANDARDS AND AS REQUIRED BY REPAIRING, MILLING OR OVERLAYING.
17. ALL PROPOSED STORM DRAINAGE PIPING TO UTILIZE WATER-TIGHT JOINTS.
18. THE CONTRACTOR SHALL BE RESPONSIBLE FOR PROPERLY SIZING ALL DRAINAGE STRUCTURES AND SUBMITTING SHOP DRAWINGS TO ENGINEER FOR REVIEW.
19. THE CONTRACTOR SHALL BE RESPONSIBLE FOR ALL PAVEMENT REPAIRS REQUIRED AS A RESULT OF ANY UTILITY WORK.
19. ALL PAVEMENT MARKINGS SHALL CONSIST OF TWO COATS OF FAST-DRYING TRAFFIC PAINT MEETING THE REQUIREMENTS OF AASHTO M 248, TYPE F. ALL PAVEMENT SYMBOLS SHALL BE THERMOPLASTIC, MEETING THE REQUIREMENTS OF AASHTO M 249.
20. A PAVEMENT MARKING MEETING TO BE HELD IN FIELD PRIOR TO CONSTRUCTION.
21. ALL RADII ARE 5' UNLESS OTHERWISE NOTED.
22. CONCRETE JOINTS ON SITE ARE TO BE FILLED WITH HOT-APPLIED JOINT FILLER, TO INCLUDE CONCRETE PAVEMENTS, MONOLITHIC CURBING AND MONOLITHIC SIDEWALKS.
23. BOTTOM AND TOP OF RETAINING WALL ELEVATION SPOT SHOTS REPRESENT THE BASE OF THE WALL AT FINISHED GROUND LEVEL AND THE TOP OF THE FACE OF THE WALL RESPECTIVELY.
24. SPOT SHOTS ALONG CURB LINES REPRESENT THE BASE OF THE CURB UNLESS NOTED OTHERWISE.
25. ALL ON-SITE CONCRETE TO BE 4,500 PSI WITH 5% TO 7% AIR ENTRAPMENT UNLESS OTHERWISE NOTED.

SOIL EROSION-SEDIMENT CONTROL NOTES

PROPOSED DEVELOPMENT

1. CONSTRUCTION WILL INCLUDE EARTHWORK, CURBING, PAVING, UTILITY INSTALLATION, LANDSCAPING AND BUILDING CONSTRUCTION. ALL DEMOLITION DEBRIS AND SOIL REMOVAL RELATED TO CONSTRUCTION SHALL BE REMOVED AND DISPOSED OF IN ACCORDANCE WITH APPLICABLE STATE AND LOCAL LAWS GOVERNING SUCH ACTIVITIES.
2. THE DETAILED EROSION AND SEDIMENT CONTROL MEASURES ARE SHOWN ON THE CE DRAWING SERIES. THE PROPOSED MEASURES HAVE BEEN DESIGNED TO PREVENT THE MIGRATION OF SOIL SEDIMENT FROM THE SITE.
3. CONSTRUCTION ACTIVITY DISTURBING EQUAL TO OR GREATER THAN ONE ACRE AND LESS THAN FIVE ACRES OF LAND IS SUBJECT TO NPDES PERMITTING REQUIREMENTS WHICH INCLUDE A STORMWATER POLLUTION PREVENTION PLAN. CONSTRUCTION ACTIVITY DISTURBING LESS THAN ONE ACRE REQUIRES A PERMIT IF IT IS PART OF A LARGER COMMON PLAN OF DEVELOPMENT OR SALE DISTURBING A TOTAL OF ONE ACRE OR GREATER, OR IS INDIVIDUALLY DESIGNATED FOR PERMIT COVERAGE BY THE NPDES PERMITTING AUTHORITY. THE CONTRACTOR WILL BE RESPONSIBLE FOR OBTAINING THE REQUIRED PERMITS.

SOIL EROSION AND SEDIMENT CONTROL NOTES

1. THE SOIL AND SEDIMENT CONTROL PRACTICES MUST BE INSTALLED IN ACCORDANCE WITH THE LOCAL GOVERNING AUTHORITY, THE MASSACHUSETTS EROSION AND SEDIMENT CONTROL GUIDELINES AND THE MASSACHUSETTS STORMWATER STANDARDS.
2. EROSION AND SEDIMENT CONTROL DEVICES MUST BE INSTALLED PRIOR TO START OF DEMOLITION AND CONSTRUCTION AND DISTURBANCE OF SITE CONTRIBUTORY DRAINAGE AREAS. THE OWNER OR ITS CONTRACTOR SHALL INSPECT, REPAIR AND REMOVE ALL SEDIMENT AND EROSION CONTROL DEVICES, AS INDICATED HEREIN. ALL EARTH CHANGES SHALL BE DESIGNED, CONSTRUCTED, AND COMPLETED IN SUCH A MANNER SO THAT THE EXPOSED AREA OF ANY DISTURBED LAND SHALL BE LIMITED TO THE SHORTEST POSSIBLE PERIOD OF TIME.
3. DISPOSAL OF COLLECTED SEDIMENT SHALL BE MADE TO AREA DESIGNATED BY THE OWNER'S SOIL ENGINEER.
4. FILTER FABRIC/SILT FENCE WILL BE INSTALLED ALONG THE TOE OF ALL CRITICAL CUT AND FILL SLOPES.
5. ALL TOPSOIL NOT TO BE USED FOR FINAL GRADING/LANDSCAPED AREAS SHALL BE REMOVED FROM THE SITE IMMEDIATELY, IN ACCORDANCE WITH APPLICABLE STATE AND LOCAL LAW. ALL TOPSOIL TO BE USED IN LANDSCAPED AREAS SHALL BE STORED/STOCKPILED IN ACCORDANCE WITH APPLICABLE STATE AND LOCAL LAW STANDARDS.
6. ALL AREAS WITHIN 500' OF AN INHABITED DWELLING SHALL BE WETTED AS NECESSARY TO PROVIDE DUST CONTROL.
7. PAVEMENT BASE COURSE MUST BE PLACED IN ALL NEW ROADWAY AREAS UPON COMPLETION OF FINE GRADING.
8. THE CONTRACTOR IS RESPONSIBLE FOR ALL PAVED ROADWAYS, ON AND OFF-SITE, WHICH MUST BE KEPT FREE OF SITE GENERATED SEDIMENT AT ALL TIMES. DUST SHALL BE CONTROLLED BY SPRINKLING OR OTHER APPROVED METHOD.
9. ALL STORM DRAINAGE OUTLETS MUST BE STABILIZED, AS REQUIRED, BEFORE THE DISCHARGE POINTS BECOME OPERATIONAL.
10. SILT FENCES AND BARRIERS MUST BE CLEANED OR REPLACED PERIODICALLY TO REMOVE BUILT-UP SILT.
11. SEDIMENT TRAPS MUST BE CLEANED WHEN CAPACITY HAS BEEN REDUCED BY AN AVERAGE OF 2' OVER ITS TOTAL AREA OR TO 70% OF ITS DESIGN VOLUMES, WHICHEVER OCCURS FIRST.
12. ALL EROSION AND SEDIMENT CONTROL DEVICES MUST BE INSPECTED ON A DAILY BASIS AND CLEANED IMMEDIATELY AFTER EACH STORM.
13. ANY TEMPORARY OR PERMANENT FACILITY DESIGNED FOR THE CONVEYANCE OF WATER AROUND, THROUGH, OR FROM THE EARTH CHANGE AREA SHALL BE DESIGNED TO LIMIT THE WATER FLOW TO A NON-EROSIVE VELOCITY.
14. THE CONTRACTOR SHALL CORRECT ANY OMISSIONS, ERRORS, OR FIELD OPERATIONS IMMEDIATELY AND IN ACCORDANCE WITH THE GUIDELINES FOR SOIL EROSION AND SEDIMENT CONTROL.
15. ANY CONVEYANCE OF THIS PROJECT PRIOR TO ITS COMPLETION WILL TRANSFER FULL RESPONSIBILITY FOR COMPLIANCE WITH THE CERTIFIED PLAN TO ANY SUBSEQUENT OWNERS.
16. SOIL EROSION AND SEDIMENT CONTROLS MUST BE INSPECTED BY THE ZONING ENFORCEMENT OFFICER BEFORE WORK MAY COMMENCE.
17. THE PROPERTY OWNER AND/OR HIS/HER AGENTS MUST MAINTAIN (REPAIR/REPLACE), WHEN NECESSARY, THE SILTATION CONTROL UNTIL ALL DEVELOPMENT ACTIVITY IS COMPLETED AND ALL DISTURBED AREAS ARE PERMANENTLY STABILIZED.

TEMPORARY STABILIZATION

SEDIMENT DISPOSAL AREAS AND TOPSOIL STOCKPILES NOT SCHEDULED FOR CONSTRUCTION ACTIVITIES WITHIN THIRTY (30) DAYS OF DISTURBANCE SHALL BE STABILIZED AS FOLLOWS:

A. SOIL AMENDMENTS AS NECESSARY.

B. ANNUAL RYE GRASS SEEDING APPLIED AT A RATE OF NOT LESS THAN 1 LB. PER 1,000 SF.

C. MULCH ALL NEWLY SEEDED AREAS WITHIN 80 LBS. OF SALT HAY OR SMALL GRAIN STRAW PER 1,000 SF.

D. WHEN DISTURBED AREAS ARE SCHEDULED FOR IMMEDIATE LANDSCAPING THEY MAY BE MULCHED AND SEEDED PER ITEM C ABOVE.

PERMANENT STABILIZATION

REFER TO PLANS FOR PERMANENT STABILIZATION METHODS + PROPOSED SEED MIXES.

A. PERMANENT VEGETATION IS TO BE SEEDED OR SODDED ON ALL DISTURBED LAND AREAS WITHIN SEVEN (7) DAYS AFTER FINAL GRADING. MULCH AS NECESSARY FOR SEED PROTECTION AND ESTABLISHMENT. AMEND SOIL AS NEEDED PRIOR TO PERMANENT SEEDING. WHEN IT IS NOT POSSIBLE TO PERMANENTLY STABILIZE A DISTURBED AREA AFTER COMPLETION OF AN EARTH CHANGE OR WHEN SIGNIFICANT EARTH CHANGE ACTIVITY CEASES, TEMPORARY SOIL EROSION CONTROL MEASURES SHALL BE IMPLEMENTED. ALL TEMPORARY SOIL EROSION CONTROL MEASURES SHALL BE MAINTAINED UNTIL PERMANENT SOIL EROSION CONTROL MEASURES SHALL BE IMPLEMENTED. ALL DISTURBED AREAS, STOCKPILES OF FILL OR EXCAVATED MATERIAL SHALL BE STABILIZED IN SUCH A MANNER AS NOT TO CAUSE UNREASONABLE HAZARD TO PERSONS OR PROPERTY.

B. MATERIALS SPECIFICATION: LAWN + MEADOW AREAS

(i) ANY SOIL HAVING A pH OF FOUR OR LESS CONTAINING IRON SULFIDES SHALL BE COVERED WITH A MINIMUM OF TWELVE INCHES OF SOIL HAVING A pH OF FIVE OR MORE PRIOR TO SEED BED PREPARATION.

C. MULCHING SHALL BE DONE AT THE RATE OF SEVENTY TO NINETY POUNDS (70-90 LBS) PER 1,000 SQUARE FEET WITH UNROTTED SALT HAY.

D. LIQUID MULCH BINDERS MUST BE USED TO ANCHOR SALT HAY, HAY OR STRAY MULCHES.

(i) APPLICATIONS SHOULD BE HEAVIER AT EDGES WHERE WIND CATCHES THE MULCH IN VALLEYS AND AT CREATED BANKS. REMAINDER OF AREA SHOULD BE UNIFORM IN APPEARANCE.

(ii) USE ONE OF THE FOLLOWING: SYNTHETIC OR ORGANIC BINDERS, BINDERS SUCH AS CURASOL DCA-70, PETRO SET, TERRA TACH, HYDRO MULCH AND AEROSPRAY MAY BE USED AT RATES RECOMMENDED BY THE MANUFACTURER OF ANCHOR MULCH MATERIALS. BINDERS CONTAINING PETROLEUM PRODUCTS SHALL NOT BE USED.

NOTE: ALL NAMES GIVEN ABOVE ARE REGISTERED TRADE NAMES. THIS DOES NOT CONSTITUTE A RECOMMENDATION OF THESE TO THE EXCLUSION OF OTHER PRODUCTS.

D. FILL MATERIAL SHALL BE FREE FROM DEBRIS, PERISHABLE OR COMBUSTIBLE MATERIAL AND FROZEN OR WET EARTH OR STONES LARGER THAN 3" IN MAXIMUM DIMENSION.

E. CONSTRUCTION AREAS SHALL BE PERIODICALLY SPRAYED WITH WATER UNTIL THE SURFACE IS WET TO CONTROL THE GENERATION OF DUST.

F. ALL REVISIONS AFTER APPROVAL HAS BEEN GRANTED SHALL BE FORWARDED TO THE APPROPRIATE DISTRICT FOR REVIEW.

G. THE LOCAL GOVERNING AUTHORITY SHALL RECEIVE WRITTEN NOTIFICATION SEVENTY TWO HOURS BEFORE THE START OF ANY CONSTRUCTION.

H. SEEDBED PREPARATION:

(i) TOPSOIL SHOULD BE A MINIMUM OF 6" DEEP (LIGHTLY COMPACTED) BEFORE SEEDING.

(ii) TOPSOIL SHALL BE TESTED PRIOR TO SEEDING.

(iii) WORK SOIL AMENDMENTS INTO SOIL AS NECESSARY AS NEARLY AS PRACTICAL TO A DEPTH OF FOUR INCHES WITH A DISC, SPRINGTOOTH HARROW OR OTHER SUITABLE EQUIPMENT. THE FINAL HARROWING OR DISCING OPERATION SHOULD BE ON THE GENERAL CONTOUR. CONTINUE ALL CLAY OR SILTY SOIL AND COARSE SANDS SHOULD BE ROLLED TO FIRM THE SEED BED WHEREVER FEASIBLE.

(iv) REMOVE FROM THE SURFACE ALL STONES ONE INCH OR LARGER IN ANY DIMENSION. REMOVE ALL OTHER DEBRIS, SUCH AS WIRE, CABLE, TREE ROOTS, PIECES OF CONCRETE, CLODS, LUMPS, OR OTHER UNSUITABLE MATERIAL.

(v) INSPECT SEED BED JUST BEFORE SEEDING. IF TRAFFIC HAS LEFT SOIL COMPACT, THE AREA MUST BE RETILLED AND FIRMED AS ABOVE.

CONTINGENCY SOIL EROSION AND SEDIMENT CONTROL NARRATIVE

1. THE GENERAL CONTRACTOR WILL DESIGNATE PERSONNEL FOR 24 HOUR EMERGENCY RESPONSE IN THE EVENT OF SEVERE WEATHER AND INCREASED POTENTIAL FOR SEVERE EROSION.
2. THE GENERAL CONTRACTOR IS REQUIRED TO MAINTAIN ON SITE OR HAVE THE ABILITY TO RETRIEVE WITHIN 12 HOURS THE FOLLOWING MATERIALS IN THE EVENT THAT THERE ARE DEFICIENCIES IN THE SESC MEASURES:
   - A. 25% OF THE INSTALLED LENGTH OF SILT FENCE
   - B. EQUIVALENT TONNAGE OF STONE FOR STABILIZATION OF 2 STABILIZATION ENTRANCES. STONE COULD BE USED FOR SLOPE REPAIRS, ENERGY DISSIPATER ENHANCEMENTS, ETC.
   - C. HEAVY EQUIPMENT CAPABLE OF TRENCHING/EXCAVATING LARGE AREAS TO DIVERT AND CONTROL RUNOFF IN A CONTROLLED MANNER.
   - D. HAVE DESIGNATED A HYDRO-SEED CONTRACTOR CAPABLE OF RESPONDING TO THE SITE WITHIN 12 HOURS
3. ANY STUMP GRINDINGS OR WOOD CHIPS GENERATED ON-SITE SHOULD BE RETAINED FOR USE TO BACK UP SILT FENCES.

LEGEND

	EXISTING	PROPOSED
PROPERTY LINE		
SETBACK LINE		
BUILDING LINE		
PEDESTRIAN DOOR LOCATION		
GARAGE DOOR		
6" CURB LINE		
SIGN		
BOLLARD		
CONCRETE		
HEAVY DUTY CONCRETE		
BITUMINOUS CONCRETE		
DECOMPOSED GRANITE		
BRICK PAVERS		
RADIANT HEATING LOCATIONS		
GRAVITY SANITARY LINE		
SANITARY MANHOLE		
STORMWATER BASIN		
WATER LINE	W	W
UNDERGROUND ELECTRIC		UE
STORM PIPE		
STORM CATCH BASIN		
STORM CURBLESS CATCH BASIN		
STORM MANHOLE		
CONTOUR	137	247
SPOT ELEVATION	X192.54	248.49
CHAIN LINK FENCE		
CEDAR FENCE		
GUIDE RAIL		
RETAINING WALL		
FIELDSTONE RETAINING WALL		
FIELDSTONE SEAT WALL		
LIMIT OF DISTURBANCE		LOD
SILT FENCE & SILT SOCK		
SILT FENCE		
TEMPORARY STOCKPILE AREA		
TREE REMOVAL		
TREELINE		
TREE		
MANHOLES		
STORM FLARED END SECTION		
FIRE HYDRANT		
GATE VALVE		
OVERHEAD WIRE		
POWER POLE		
GUY WIRE		
LIGHT POLE		
TELECOMMUNICATION LINE		T
GAS LINE	G	G
SNOW STORAGE AREA		
BORING LOCATION		
TEST PIT LOCATION		

GRADING & DRAINAGE NOTES

1. ALL PROPOSED STORM DRAINAGE PIPING TO UTILIZE WATER-TIGHT JOINTS.
2. CLEANOUTS SHALL BE PROVIDED FLUSH TO GRADE AT ALL LOCATIONS OF ROOF DRAIN INTERSECTIONS, BENDS AND UPSTREAM ENDS.
3. ALL REQUIRED STORM LATERALS SERVICING THE BUILDINGS SHALL BE COORDINATED AND CONSTRUCTED TO WITHIN TEN FEET OF EACH BUILDING LATERAL ENTRANCE LOCATION AT THE INVERTS NOTED. ANY NECESSARY EXTENSIONS, RELOCATIONS, OR CORRECTIONS WITHIN 10' OF THE BUILDING NECESSARY TO COMPLETE CONNECTION OF LATERALS TO THE BUILDINGS SHALL BE MADE BY THE BUILDING CONTRACTOR.
4. CONTRACTOR IS RESPONSIBLE FOR DETERMINING THE APPROPRIATE SIZES OF THE DRAINAGE STRUCTURES (CATCH BASINS, MANHOLES, YARD DRAINS, ETC.) TO ACCOMMODATE THE PIPING SHOWN.
5. STORM DRAINAGE PIPING INSTALLATION SHALL COMMENCE AT THE FURTHEST DOWNSTREAM POINT AND PROCEED UPSTREAM "IN THE DRY".
6. CONTRACTOR SHALL CONNECT ALL NEW ROOF DRAINS TO THE DRAINAGE SYSTEM. LOCATIONS AND ELEVATIONS OF ROOF LEADERS SHOULD BE COORDINATED WITH MEP AND ARCHITECTURAL DRAWINGS PRIOR TO CONSTRUCTION.
7. THE CONTRACTOR WILL BE REQUIRED TO CLEAN THE ENTIRE DRAINAGE SYSTEM OF ALL DEBRIS AND OBSTRUCTIONS BOTH DURING CONSTRUCTION AND AT THE END OF CONSTRUCTION PRIOR TO ACCEPTANCE. THIS SHALL INCLUDE, BUT NOT BE LIMITED TO, REMOVAL OF ALL FORMWORK FROM STRUCTURES, CONCRETE AND MORTAR DROPPINGS, CONSTRUCTION DEBRIS, AND DIRT. THE SYSTEM SHALL BE THOROUGHLY FLUSHED CLEAN AND THE CONTRACTOR SHALL FURNISH ALL NECESSARY HOSE, PUMPS, PIPE, AND OTHER EQUIPMENT THAT MAY BE REQUIRED FOR THIS PURPOSE. NO DEBRIS SHALL BE FLUSHED INTO EXISTING STORM DRAINS, WETLANDS, OR WATERCOURSES; ALL DEBRIS SHALL BE REMOVED FROM THE SYSTEM AND DISPOSED OF IN ACCORDANCE WITH ALL GOVERNING AGENCIES.
8. ALL MANHOLE COVERS, GRATES, INLETS, AND RIMS TO REMAIN SHALL BE ADJUSTED TO PROPOSED GRADE.
9. CONTRACTOR TO PROVIDE ALL FITTINGS AND BENDS NECESSARY TO ACCOMPLISH WORK.
10. REFER TO THE "STORMWATER MANAGEMENT REPORT FOR MEDWAY MUNICIPAL COMPLEX APPENDIX H OPERATION AND MAINTENANCE PLAN" FOR OPERATION OF THE STORMWATER MANAGEMENT SYSTEM.

DEMOLITION NOTES

1. DEMOLITION CONTRACTOR SHALL COORDINATE ALL DEMOLITION SEQUENCING WITH THE GENERAL CONTRACTOR FOR TEMPORARY CONDITIONS AND PHASING.
2. THE CONTRACTOR IS TO REFER TO THE REMAINING CONSTRUCTION DRAWING SET FOR REMOVAL LIMIT COORDINATION WITH OTHER DESIGN ELEMENTS.
3. EXCEPT WHERE OTHERWISE NOTED, EXISTING UTILITY PIPES ARE TO REMAIN.
4. THE CONTRACTOR IS TO REMOVE AND DISPOSE OR RECYCLE ALL SITE FEATURES WITHIN THE LIMITS OF CLEARING, UNLESS OTHERWISE DIRECTED IN THE PLANS, SPECIFICATIONS AND THE SITE CONSTRUCTION DRAWINGS.
5. THE CONTRACTOR SHALL NOTIFY AND OBTAIN ALL SHUTOFFS FOR ALL APPLICABLE UTILITIES PRIOR TO THE COMMENCEMENT OF DEMOLITION.
6. THE CONTRACTOR SHALL LOCATE/CONFIRM ALL DRAINAGE INFRASTRUCTURE AND MAINTAIN ADEQUATE STORM DRAINAGE THROUGHOUT CONSTRUCTION.
7. THE CONTRACTOR SHALL COORDINATE ANY PARTIAL DEMOLITION OF DRAINAGE OR UTILITY INFRASTRUCTURE WITH THE FINAL CONDITION. SEE CONSTRUCTION DRAWINGS.
8. THE CONTRACTOR SHALL FIELD LOCATE AND PROPERLY DISCONNECT APPROPRIATE LATERALS TO LIVE MAINS PRIOR TO DEMOLITION AND IN ACCORDANCE WITH UTILITY COMPANY STANDARDS.
9. THE CONTRACTOR SHALL BE RESPONSIBLE FOR OBTAINING ALL NECESSARY DEMOLITION ASSOCIATED PERMITS.
10. THE CONTRACTOR SHALL REMOVE AND LEGALLY DISPOSE OF ALL STRUCTURES WITHIN THE PROJECT LIMITS UNLESS INDICATED TO REMAIN.
11. THE CONTRACTOR SHALL INCLUDE IN THEIR BID ALL TEMPORARY FACILITIES AND SERVICES NECESSARY TO SATISFY FEDERAL, STATE & LOCAL REQUIREMENTS INCLUDING BUT NOT NECESSARILY LIMITED TO BRACING, SHORING, PAVEMENT REPAIR, FENCING, PEDESTRIAN AND VEHICLE ACCESS, CONCRETE PADS, ETC.
12. THE CONTRACTOR SHALL REFER TO THE SOIL EROSION & SEDIMENT CONTROL PLANS.
13. IF GROUNDWATER IS ENCOUNTERED ACROSS THE EXISTING SITE. DEWATERING OF EXCAVATIONS MAY BE REQUIRED. THE CONTRACTOR IS RESPONSIBLE FOR OBTAINING ANY NECESSARY PERMITS.

ABBREVIATIONS

ARCH.	ARCHITECTURAL
AUL	ACTIVITY AND USE LIMITATION
AD	AREA DRAIN
BC	BOTTOM OF CURB
BIT.	BITUMINOUS
BOH	BUILDING OVERHANG
BW	BOTTOM OF WALL
CB	CURB CATCHBASIN
CC	CONCRETE CURB
CLCB	CURBLESS CATCH BASIN
CO	CLEAN OUT
CONC.	CONCRETE
CP	CONCRETE PAD
CPY	CANOPY DRAIN
DIP	DUCTILE IRON PIPE
DW	DETECTABLE WARNING
DYL	DOUBLE YELLOW LINE
EL	ELEVATION
EP	EDGE OF PAVEMENT
EX	EXISTING
FES	FLARED END SECTION
FFE	FINISHED FLOOR ELEVATION
GR	GRADE
HDPE	HIGH DENSITY POLYETHYLENE PIPE
HP	HIGHPOINT
INV	INVERT
LA	LANDSCAPED AREA
LF	LINEAR FEET
MH	MANHOLE
N.T.S.	NOT TO SCALE
OCS	OUTLET CONTROL STRUCTURE
PR	PROPOSED
PVC	POLYVINYL CHLORIDE PIPE
RCP	REINFORCED CONCRETE PIPE
RET.	RETAINING
RL	ROOF LEADER
R.O.W	RIGHT OF WAY
R&D	REMOVE & DISPOSE
R&R	REMOVE & REPLACE
SAN MH	SANITARY SEWER MANHOLE
SD	STORM DRAIN
SF	SQUARE FEET
SWL	SINGLE WHITE LINE
SYL	SINGLE YELLOW LINE
TC	TOP OF CURB
TD	TRENCH DRAIN
TF	TOP OF FRAME
TW	TOP OF WALL
TYP.	TYPICAL
WQU	WATER QUALITY UNIT
YD	YARD DRAIN

DECISION DATE: ______

ENDORSEMENT DATE: ______

MEDWAY PLANNING & ECONOMIC DEVELOPMENT BOARD

DORE + WHITTIER
MASSACHUSETTS
260 MERRIMAC STREET BUILDING 7, 2ND FLOOR
NEWBURYPORT, MA 01950
P: (978) 499-2999
VERMONT
212 BATTERY STREET
BURLINGTON, VT 05401
P: (802) 863-1428

LANGAN
Langan Engineering and Environmental Services, LLC.
100 Cambridge Street, Suite 1310
Boston, MA 02114
T: 617.824.9100 F: 617.824.9101 www.langan.com

MEDWAY MUNICIPAL COMPLEX
120 MAIN STREET, MEDWAY, MA 02053

PROJECT NUMBER: 151072201

SEAL AND SIGNATURE:
COMMONWEALTH OF MASSACHUSETTS JOHN D. PLANTE No. 38718 REGISTERED PROFESSIONAL ENGINEER

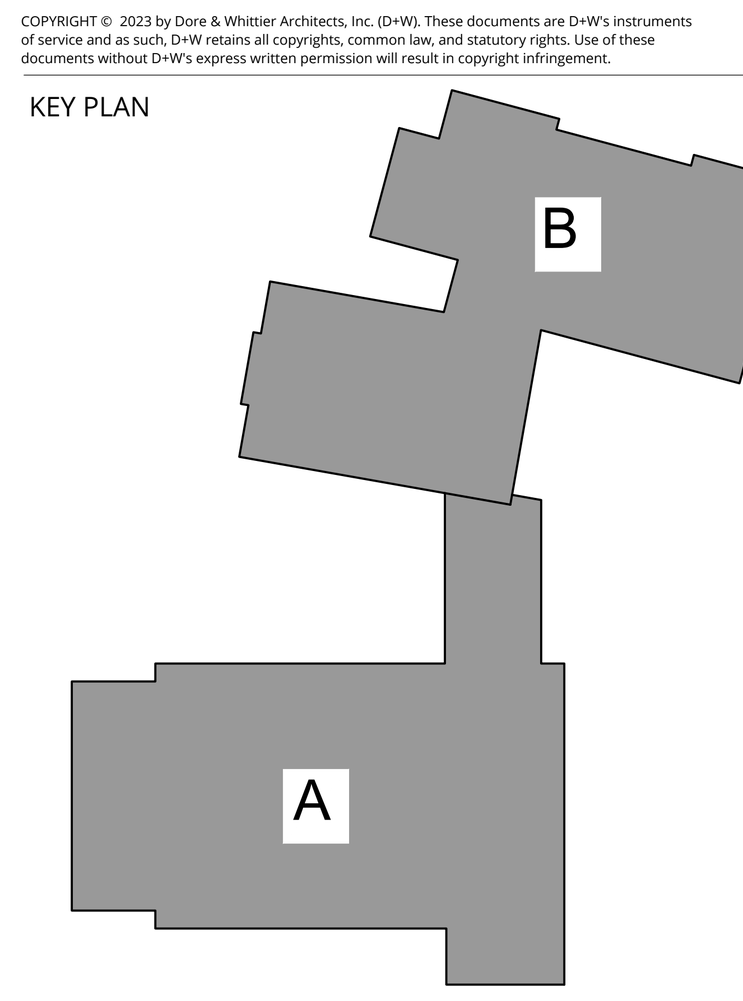
REVISIONS:

NO.	DATE	TITLE
1	09/18/2026	PEER REVIEW COMMENT RESPONSE

ISSUE TITLE AND DATE:
PERMIT DRAWINGS
7/20/2026

COPYRIGHT © 2023 by Dore & Whittier Architects, Inc. (D+W). These documents are D+W's instruments of service and as such, D+W retains all copyrights, common law, and statutory rights. Use of these documents without D+W's express written permission will result in copyright infringement.

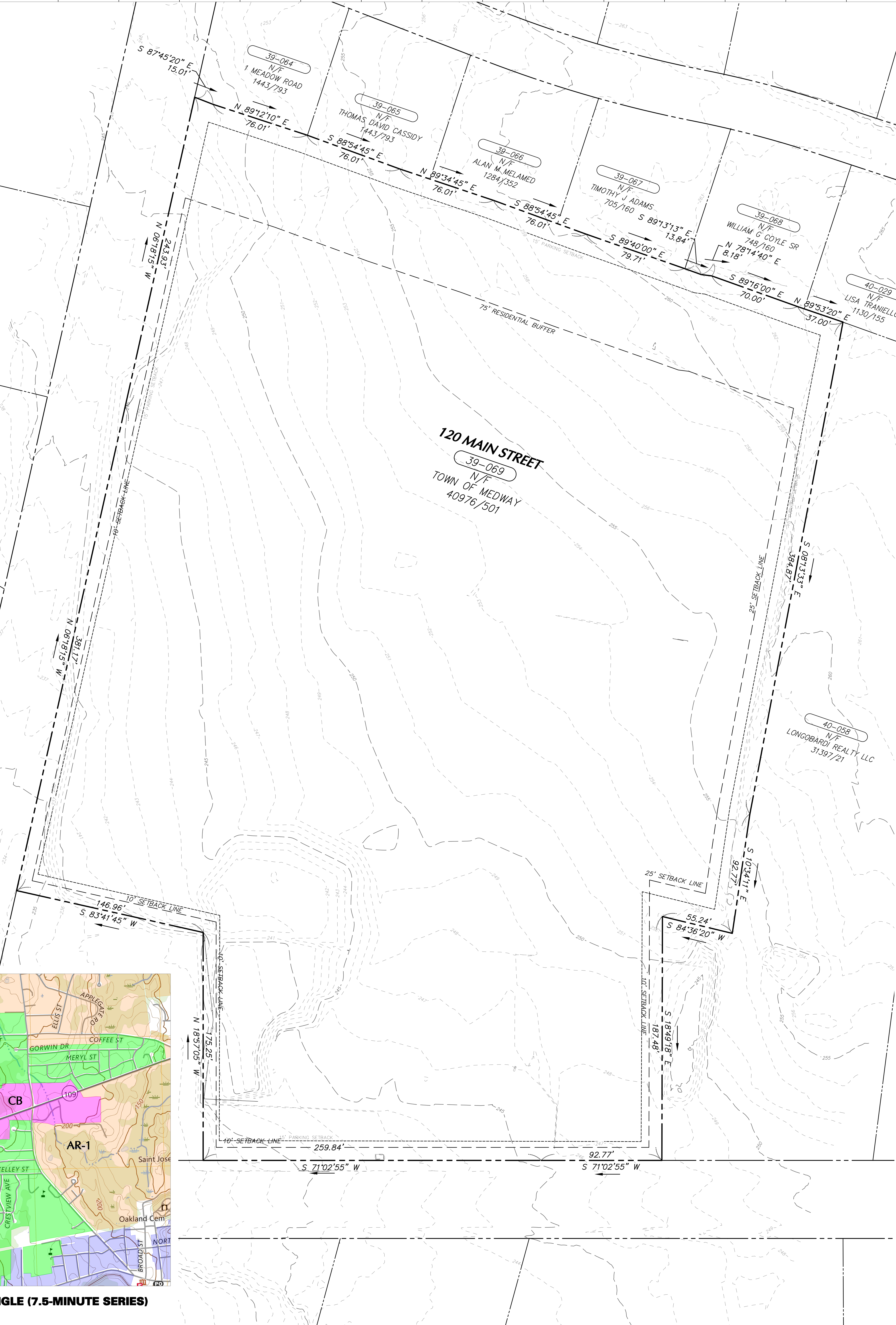
KEY PLAN

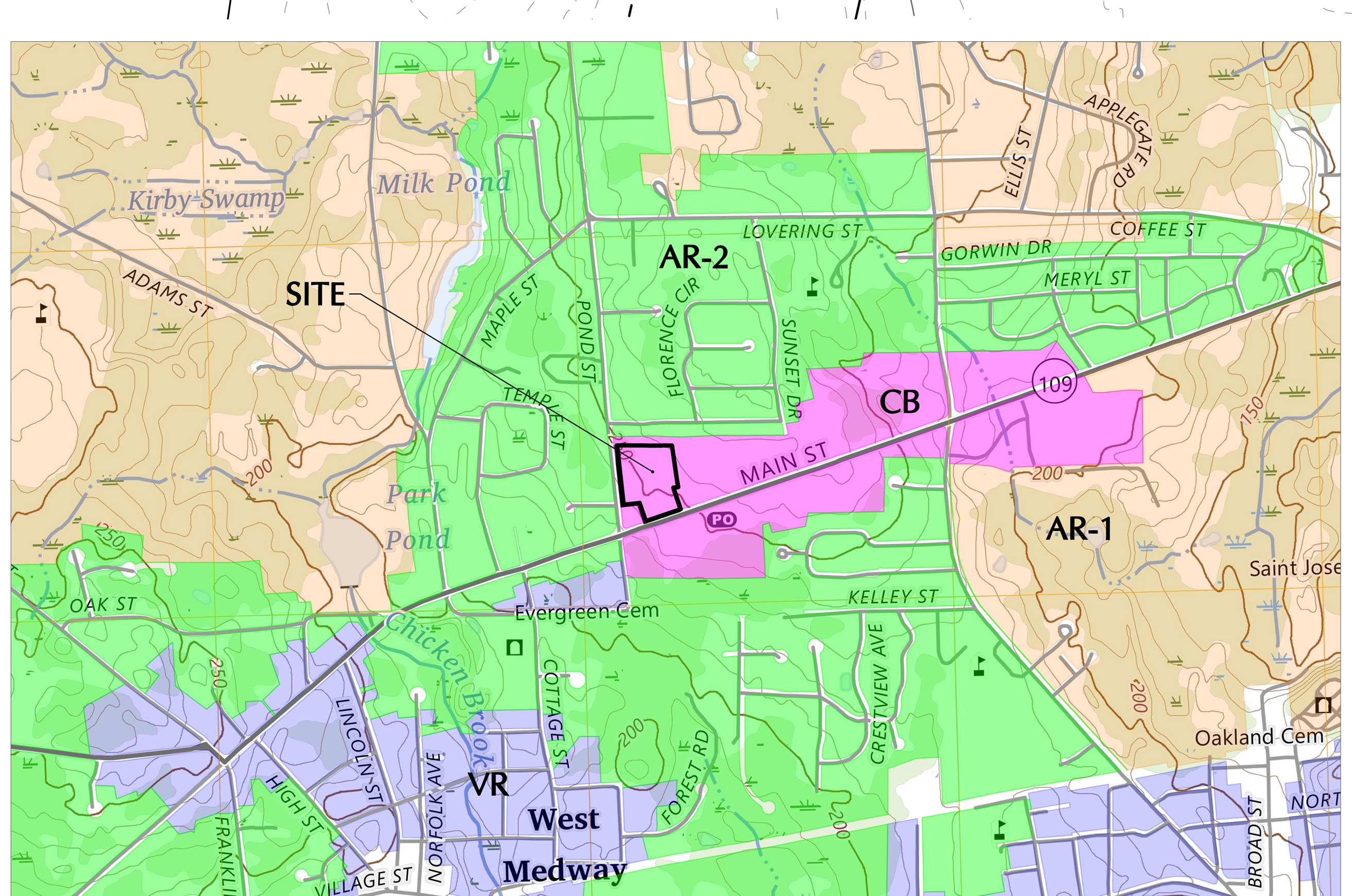


ORIENTATION AND SCALE:
N TRUE NORTH
PROJECT NORTH
18"X24" HALF-SIZE PRINT 60 0 20 40 60 SCALE: 1" = 60'
36"X48" FULL-SIZE PRINT 30 0 15 30 SCALE: 1" = 30'

SHEET TITLE:
MASTER LEGEND & NOTES

SHEET NUMBER:
CS002





MAP REFERENCE: USGS HOLLISTON QUADRANGLE (7.5-MINUTE SERIES)
SCALE: 1" = 1000'

300' ABUTTERS

MAP/PARCEL REF.	OWNER NAME	PROPERTY ADDRESS
MAP 39, LOT 67	ADAMS TIMOTHY J.; ADAMS COLLEEN C	7 MEADOW RD
MAP 39, LOT 68	COYLE WILLIAM G. SR.; MORELL DIANE E	9 MEADOW RD
MAP 40, LOT 58	LONGOBARDI REALTY LLC; LONGOBARDI PAUL A.	116 MAIN ST
MAP 39, LOT 30	AOUDE ELIAS F.	132 MAIN ST
MAP 40, LOT 117	CRONIN KEVIN; MCGARRY MARION J.	12 MEADOW RD
MAP 39, LOT 59	LOZINSKI MICHAEL R.; BLAKE NANCY	16 POND ST
MAP 39, LOT 22	AZAR JACK	2 DRYBRIDGE RD
MAP 39, LOT 70	DUFFICY AND SONS LLC	122 MAIN ST
MAP 40, LOT 57	MEDWAY REALTY LLC	114 MAIN ST
MAP 39, LOT 28	BELO DE BARROS JOSELIO	1 DRYBRIDGE RD
MAP 39, LOT 20	FAZIO EMILY; WEIS IV JOHN PIERCE	7 POND ST
MAP 39, LOT 69	MEDWAY TOWN OF	120 MAIN ST
MAP 39, LOT 64	CAIRNEY BRENDAN T.; CAIRNEY MICHELLE L.	1 MEADOW RD
MAP 39, LOT 19	FICORILLI AMY L.	9 POND ST
MAP 39 LOT 66	MELAMED ALAN M.	5 MEADOW RD
MAP 40, LOT 32	CARINI LIFE ESTATE MARCIA F.; CARINI JR FRANK A.	17 MEADOW RD
MAP 40, LOT 115	GIRARD BRIAN; GIRARD PATRICIA	9 FLORENCE CIR
MAP 39, LOT 55	MILLAR COURTNEY L.; FORD ANDREW Y.	8 MEADOW RD
MAP 39, LOT 65	CASSIDY DAVID THOMAS; CASSIDY MARY LOUISE	3 MEADOW RD
MAP 39, LOT 29	HAMILTON ROBERT S.; HAMILTON CHERYL A.	1–A DRYBRIDGE RD
MAP 39, LOT 18	OTERI DAVID; OTERI ELIZABETH	11 POND ST
MAP 40, LOT 30	CELLUCCI MICHAEL J.; CELLUCCI DARLENE	13 MEADOW RD
MAP 39, LOT 58	HILLS CHRISTOPHER A.; KELLY CASEY E.	2 MEADOW RD
MAP 48, LOT 47	RTE 85 REALTY CORP	119B MAIN ST
MAP 40, LOT 116	CHLEBDA RONALD; CHLEBDA DEBORAH	14 MEADOW RD
MAP 39, LOT 17	JACKEY ROBIN A TRS; JACKEY LISA M TRS	13 POND ST
MAP 40, LOT 71	RTE 85 REALTY CORP	117 MAIN ST
MAP 39, LOT 5	COLBY MATTHEW JAMES; DENTON SUZANNE	6 MEADOW RD
MAP 39, LOT 54	LINDQUIST RONALD C.; KEWRIGA ELOUISE A.	10 MEADOW RD
MAP 40, LOT 72	RTE 85 REALTY CORP	115A MAIN ST
MAP 48, LOT 47–0001	RTE 85 REALTY CORP	119A MAIN ST
MAP 48, LOT 47–0002	RTE 85 REALTY CORP	1 ELM ST
MAP 40, LOT 73	RTE 85 REALTY CORP	115 MAIN ST
MAP 48, LOT 46	RTE 85 REALTY CORP	119 MAIN ST
MAP 39, LOT 57	SHEA BRIAN J.; SHEA SUSAN C.	4 MEADOW RD
MAP 39, LOT 21	SHEKHAR AJAY; SHEKHAR MONISHA	5 POND ST
MAP 40, LOT 31	SUKUMARANNAIR SHEENA USHA; MANOHARAN PILLAI MANOJKUMAR KADAKKETHU	15 MEADOW RD
MAP 48, LOT 37	SURNER RACHEL; SURNER SAGE	121 MAIN ST
MAP 40, LOT 29	TRANIELLO LISA	11 MEADOW RD
MAP 39, LOT 16	VOLPICELLI COREY R..	15 POND ST

DECISION DATE: ____________

ENDORSEMENT DATE: ____________

MEDWAY PLANNING & ECONOMIC DEVELOPMENT BOARD

DORE + WHITTIER
MASSACHUSETTS
260 MERRIMAC STREET BUILDING 7, 2ND FLOOR
NEWBURYPORT, MA 01950
P: (978) 499-2999

VERMONT
212 BATTERY STREET
BURLINGTON, VT 05401
P: (802) 863-1428

LANGAN
Langan Engineering and Environmental Services, LLC.
100 Cambridge Street, Suite 1310
Boston, MA 02114
T: 617.824.9100 F: 617.824.9101 www.langan.com

PROJECT NUMBER:

SEAL AND SIGNATURE:

JOHN D. PLANTE, CIVIL, No. 38118 — COMMONWEALTH OF MASSACHUSETTS, REGISTERED PROFESSIONAL ENGINEER

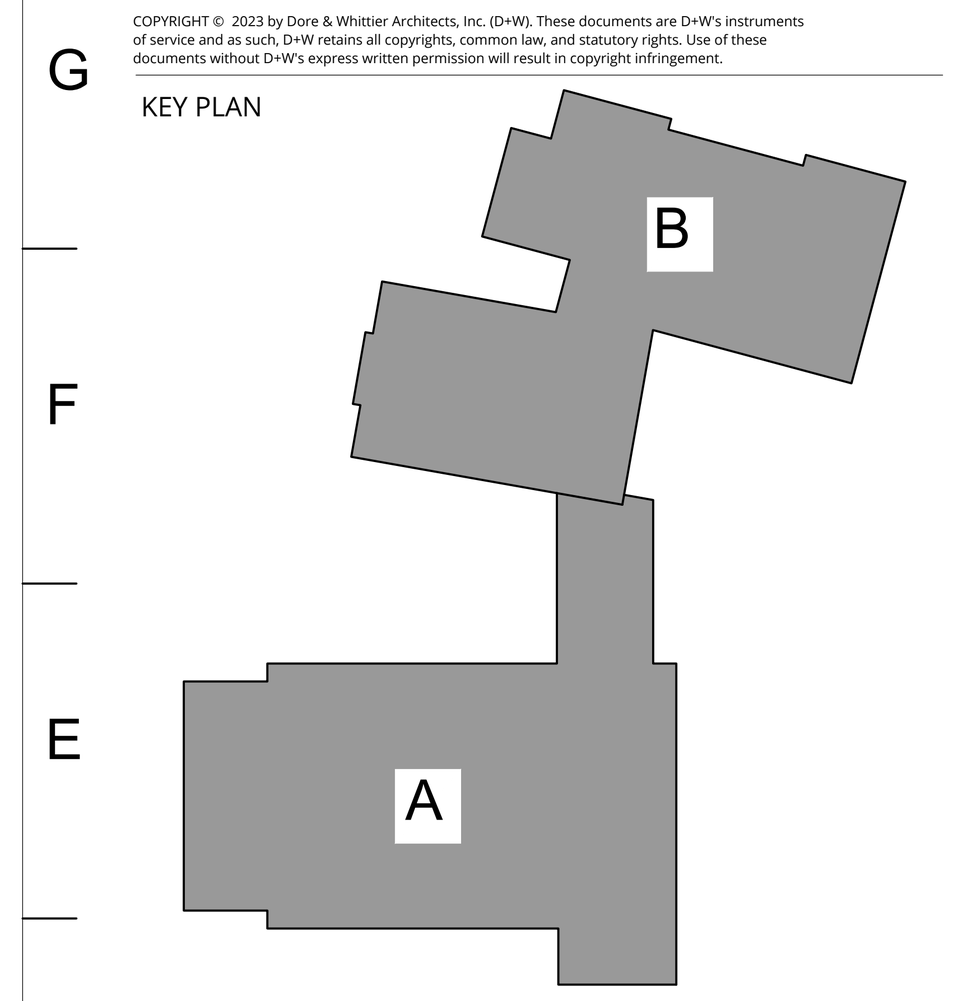
REVISIONS:

NO.	DATE	TITLE
1	09/18/2026	PEER REVIEW COMMENT RESPONSE

ISSUE TITLE AND DATE:
PERMIT DRAWINGS
7/20/2026

COPYRIGHT © 2023 by Dore & Whittier Architects, Inc. (D+W). These documents are D+W's instruments of service and as such, D+W retains all copyrights, common law, and statutory rights. Use of these documents without D+W's express written permission will result in copyright infringement.

KEY PLAN



ORIENTATION AND SCALE:

PROJECT NORTH

SHEET TITLE:

SITE CONTEXT PLAN

SHEET NUMBER:
CS003

SURVEYOR'S NOTES

1. THIS SURVEY IS BASED UPON EXISTING PHYSICAL CONDITIONS FOUND AT THE SUBJECT SITE, DEED INFORMATION AND THE FOLLOWING REFERENCES:

   B. RECORD PLANS:

   LOCUS PLANS

   PLAN TITLED "PLAN OF LAND IN MEDWAY" DATED FEBRUARY 26, 1956 LAST REVISED AUGUST 7, 1956 BY RUSSELL S BOWIE, CIVIL ENGINEER. FILED WITH THE NORFOLK COUNTY REGISTRY DISTRICT AS PLAN 26706-A

   STREET PLANS

   PLAN TITLED "PLAN OF RELOCATION OF MAIN STREET, MEDWAY, MASS. FROM MILLIS LINE TO BELLINGHAM LINE AS RELOCATED BY THE COUNTY COMMISSIONERS OF NORFOLK COUNTY" DATED OCTOBER 1921 BY E. WORTHINGTON ENG. FILED WITH THE NORFOLK REGISTRY OF DEEDS AS BOOK 101 PLAT 128, 129, 130.

   PLAN TITLED "PLAN AND PROFILED SHOWING THE RELOCATION AND WIDENING POND STREET MEDWAY BETWEEN MAIN STREET AND LOVERING STREET AS MADE BY THE NORFOLK COUNTY COMMISSIONERS" DATED OCTOBER 7, 1952 BY WALLACE S CARSON, COUNTY ENGINEER. FILED WITH THE NORFOLK COUNTY REGISTRY OF DEEDS AS BOOK 172 PLAN 1314, 1315, 1316.

   UNRECORDED PLANS

   PLAN TITLED "PLAN OF LAND IN MEDWAY, MASS. PROPERTY OF WALTER K VARDO" DATED APRIL 29, 1961 BY BOWIE ENGINEERING CO.. FILED WITH THE NORFOLK REGISTRY OF DEEDS AS BOOK 3901 PAGE 450.

2. THE MERIDIAN OF THIS SURVEY IS REFERENCED TO MASSACHUSETTS STATE PLANE COORDINATE SYSTEM NAD 83 (EPOCH 2001). POSITION WAS DETERMINED BY GLOBAL NAVIGATION SATELLITE SYSTEMS (GNSS) AS PROVIDED BY HXGN SMARTNET CONTINUOUSLY OPERATED REFERENCE STATIONS (CORS).

3. ELEVATIONS SHOWN ARE REFERENCED TO NORTH AMERICAN VERTICAL DATUM OF 1988 (NAVD88) (GEOID 18) AS DETERMINED BY GNSS.

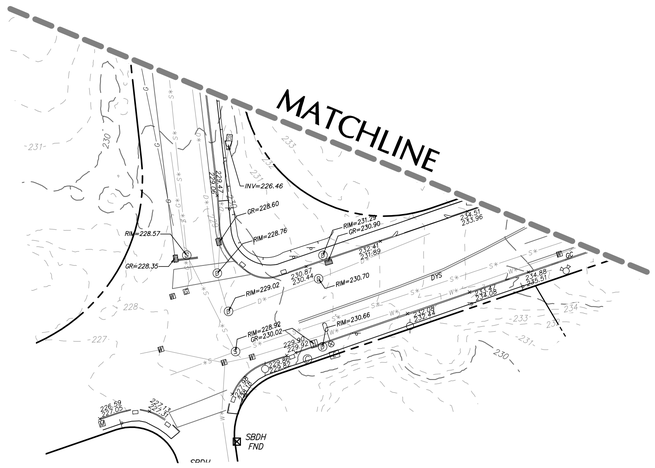
4. PLANIMETRIC AND TOPOGRAPHIC INFORMATION SHOWN HEREON HAS BEEN OBTAINED FROM GROUND SURVEY BY LANGAN ENGINEERING AND ENVIRONMENTAL SERVICES, LLC. DURING THE MONTH OF MARCH AND APRIL 2026.

5. AS PER THE NATIONAL FLOOD INSURANCE PROGRAM FIRM MAP ENTITLED "NORFOLK COUNTY, MASSACHUSETTS PANEL 143 OF 430, MAP NUMBER 25021C0143F, EFFECTIVE DATE JULY 8, 2025" THE PROJECT AREA IS IN ZONE X (UNSHADED).

6. ADDITIONAL UTILITY (WATER, GAS, ELECTRIC, ETC.) DATA MAY BE SHOWN FROM FIELD LOCATED SURFACE MARKINGS (BY OTHERS), EXISTING STRUCTURES, AND/OR FROM EXISTING DRAWINGS.

7. ALL BUILDINGS AND STRUCTURES WERE LOCATED AND MEASURED AT GROUND LEVEL. THE SURVEYOR MAKES NO DETERMINATIONS OR GUARANTEES AS TO THE ABSENCE, EXISTENCE OR LOCATION OF UNDERGROUND STRUCTURES, FOUNDATIONS, FOOTINGS, PROJECTIONS, WALLS, TANKS, SEPTIC SYSTEMS, ETC. NO TEST PITS, EXCAVATIONS OR GROUND PENETRATING RADAR WERE PERFORMED AS PART OF THIS SURVEY.

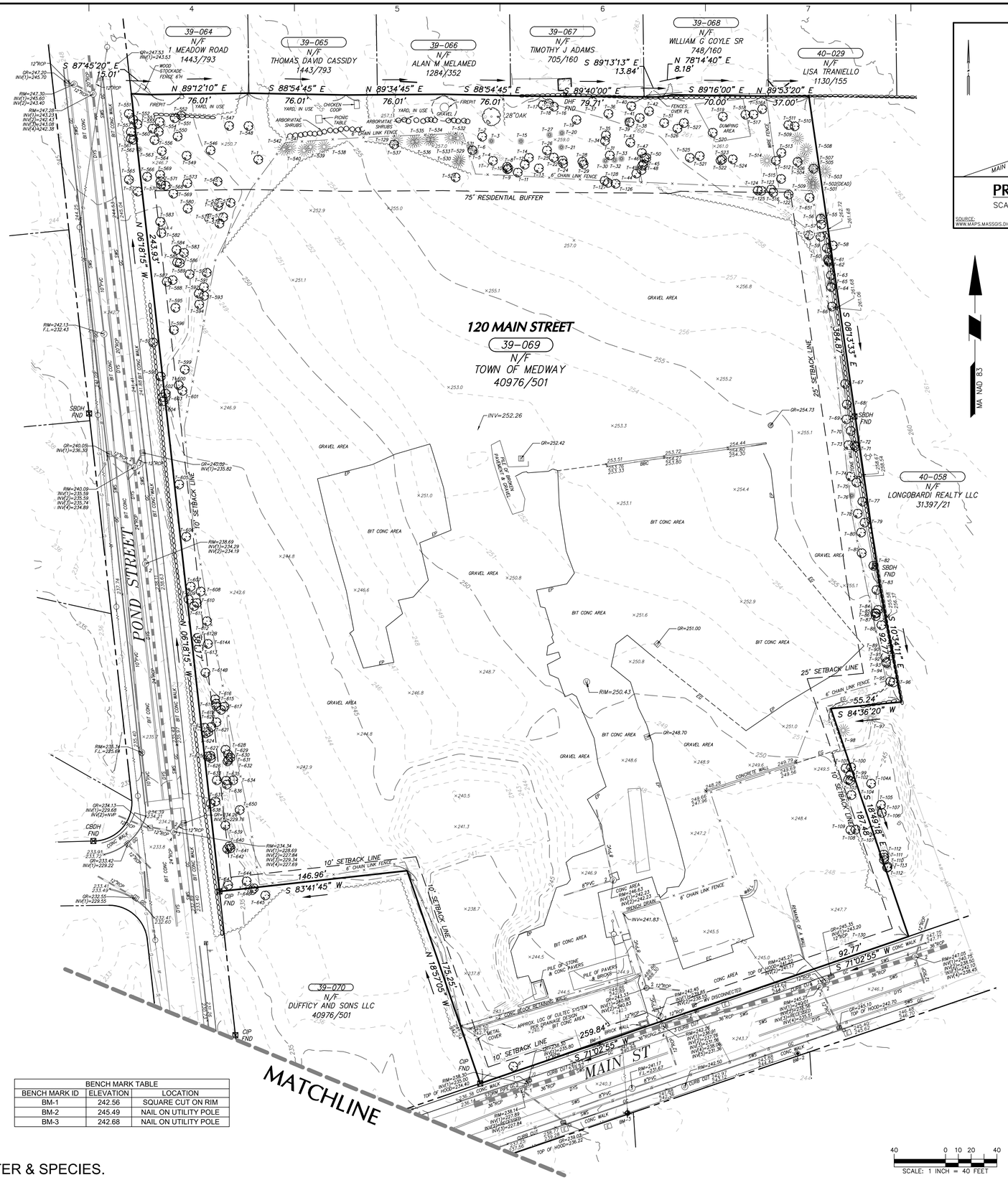
8. PRIOR TO ANY DESIGN OR CONSTRUCTION, THE PROPER UTILITY AGENCIES MUST BE CONTACTED FOR VERIFICATION OF UTILITY TYPE AND FOR FIELD LOCATIONS.



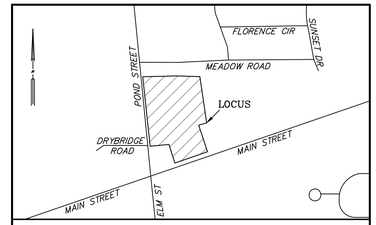
LEGEND (NOT SHOWN TO SCALE)

AIR CONDITIONING UNIT		DH	DRILL HOLE
BOLLARD		BOH	BUILDING OVERHANG
DOOR		BW	BOTTOM OF WALL
DOUBLE DOOR		EP	EDGE OF PAVEMENT
SIGN		EW	EDGE OF WALK
SHRUB		DW	DETECTABLE WARNING
TREE		BC	BITUMINOUS CURB
CATCH BASIN		CC	CONCRETE CURB
CLEANOUT		GC	GRANITE CURB
ELECTRIC BOX		W/F	WOOD FRAME
ELECTRIC METER		FF	FINISHED FLOOR ELEVATION
FILLER VALVE		ETW	EDGE OF TRAVELED WAY
FIRE HYDRANT			TREE LINE
GAS METER			OVERHEAD WIRE
GAS VALVE			WETLAND LINE
GUY POLE			EASEMENT LINE
GUY WIRE			PROPERTY LINE
LIGHT POLE			RIGHT-OF-WAY LINE
MANHOLE (TYPE AS LABELED)		FM	SANITARY FORCE MAIN
POWER POLE		CATV	CABLE TV MARK OUT LINE
WATER VALVE		D	DRAINAGE MARK OUT LINE
BITUMINOUS		E	ELECTRIC MARK OUT LINE
CONCRETE		C	COMMUNICATION MARK OUT LINE
CONCRETE PAD		G	GAS MARK OUT LINE
LANDSCAPED AREA		S	SANITARY SEWER MARK OUT LINE
SINGLE WHITE STRIPE		W	WATER MARK OUT LINE
DOUBLE YELLOW STRIPE		ST	STEAM MARK OUT LINE
REINFORCED CONCRETE PIPE		UNK	UNKNOWN MARK OUT LINE
VETRIFIED CLAY PIPE		R*	REFERENCE UTILITY LINE (TYPE AS NOTED) – PLOTTED FROM EXISTING MAPPING
MERESTONE MONUMENT			

BENCH MARK TABLE		
BENCH MARK ID	ELEVATION	LOCATION
BM-1	242.56	SQUARE CUT ON RIM
BM-2	245.49	NAIL ON UTILITY POLE
BM-3	242.68	NAIL ON UTILITY POLE



SEE SHEET VB102 FOR COMPLETE TREE CHART (INCL. TREE NO., DIAMETER & SPECIES.



PROJECT LOCATION MAP

SCALE: NOT TO SCALE

SOURCE: WWW.MAPS.MASSGIS.DIGITAL.MASS.GOV

MA NAD 83

Date	Description	No.
7/9/2026	ADDITIONAL FIELDWORK	1

Revisions

IAN C. WISURI — DATE SIGNED
PROFESSIONAL LAND SURVEYOR
MA STATE LIC. No. 47403

LANGAN
Langan Engineering and Environmental Services, LLC.
100 Cambridge Street, Suite 1310
Boston, MA 02114
T: 617.824.9100 F: 617.824.9101 www.langan.com

Project
D+W MEDWAY MUNICIPAL
MEDWAY
SUFFOLK COUNTY MASSACHUSETTS

Prepared for
DORE + WHITTIER
260 MERRIMAC STREET, BLDNG 7, 2ND FL
NEWBURYPORT, MA 01950

Record Owner
NOW/FORMERLY
TOWN OF MEDWAY

Drawing Title
BOUNDARY & TOPOGRAPHIC SURVEY

Project No. 151072202
Date JUNE 12, 2026
Drawn By AJR / DRL
Checked By ICW

VB101
Sheet 1 of 1

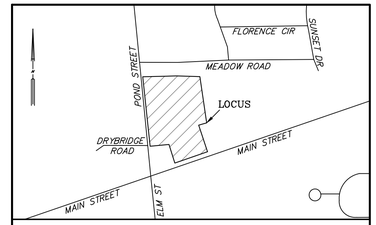
SCALE: 1 INCH = 40 FEET

LANGAN
Project No. 151072202

© 2026 Langan

TREE TABLE

TREE NO.	DIAMETER	SPECIES	TREE NO.	DIAMETER	SPECIES	TREE NO.	DIAMETER	SPECIES	TREE NO.	DIAMETER	SPECIES	TREE NO.	DIAMETER	SPECIES
T-1	20"	ACERRUBRUM	T-57	9"	FRAXINUSAMERICANA	T-109	9"	QUERCUSRUBRA	T-545	24"	ACERRUBRUM	T-598	9"	FRAXINUSAMERICANA
T-2	21"	ACERRUBRUM	T-58	14"	QUERCUSRUBRA	T-110	7"	QUERCUSRUBRA	T-546	24"	ACERRUBRUM	T-599	6"	ACERRUBRUM
T-3	10"	PINUSSTROBUS	T-59	15"	QUERCUSRUBRA	T-111	10"	ACERRUBRUM	T-547	28"	ACERRUBRUM	T-600	8"	FRAXINUSAMERICANA
T-4	7"	PINUSSTROBUS	T-60	7"	ACERRUBRUM	T-123	9"	ACERRUBRUM	T-548	28"	QUERCUSRUBRA	T-601	11"	ACERRUBRUM
T-5	6"	PINUSSTROBUS	T-61	6"	ACERRUBRUM	T-126	6"	FRAXINUSAMERICANA	T-549	18"	QUERCUSRUBRA	T-602	11"	ACERRUBRUM
T-6	23"	PINUSSTROBUS	T-62	7"	ACERRUBRUM	T-127	12"	ACERRUBRUM	T-550	40"	QUERCUSRUBRA	T-603	10"	ULMUSRUBRA
T-7	16"	FRAXINUSAMERICANA	T-64	7"	PINUSSTROBUS	T-128	9"	ULMUSGLABRA	T-551	15"	FRAXINUSAMERICANA	T-604	8"	FRAXINUSAMERICANA
T-8	9"	ACERRUBRUM	T-65	18"	QUERCUSALBA	T-129	6"	ACERRUBRUM	T-551	20"	FRAXINUSAMERICANA	T-605	8"	FRAXINUSAMERICANA
T-9	9"	ACERRUBRUM	T-66	10"	QUERCUSPALUSTRIS	T-130	42"	PICEAABIES	T-552	18"	FAGUSGRANDIFOLIA	T-606	16"	ACERRUBRUM
T-10	7"	ACERRUBRUM	T-67	6"	POPULUSTREMULOIDES	T-500	--		T-552	20"	FAGUSGRANDIFOLIA	T-607	18"	ACERRUBRUM
T-11	7"	ACERRUBRUM	T-68	11"	QUERCUSPALUSTRIS	T-501	18"	PINUSSTROBUS	T-553	15"	ACERRUBRUM	T-608	7"	FRAXINUSAMERICANA
T-12	14"	ACERRUBRUM	T-69	8"	POPULUSTREMULOIDES	T-502	16"	DEAD	T-554	10"	ACERRUBRUM	T-609	14"	ULMUSRUBRA
T-13	7"	FAGUSGRANDIFOLIA	T-70	11"	QUERCUSRUBRA	T-503	8"	PINUSSTROBUS	T-555	18"	ACERRUBRUM	T-610	12"	ACERNEGUNDO
T-14	8"	ACERRUBRUM	T-71	8"	POPULUSTREMULOIDES	T-504	7"	ACERPLATANOIDES	T-556	8"	FRAXINUSAMERICANA	T-611	6"	ULMUSRUBRA
T-15	9"	JUNIPERUSVIRGINIANA	T-72	6"	ACERRUBRUM	T-505	9"	PINUSSTROBUS	T-557	12"	ACERRUBRUM	T-612	15"	ACERRUBRUM
T-16	20"	ACERRUBRUM	T-73	8"	ACERRUBRUM	T-506	20"	PINUSSTROBUS	T-560	24"	ACERRUBRUM	612B	6"	ULMUSRUBRA
T-17	6"	ACERRUBRUM	T-74	10"	ACERRUBRUM	T-507	9"	PINUSSTROBUS	T-561	12"	FRAXINUSAMERICANA	T-613	9"	ULMUSRUBRA
T-18	10"	ACERRUBRUM	T-75	10"	QUERCUSRUBRA	T-508	16"	PINUSSTROBUS	T-562	12"	FRAXINUSAMERICANA	614A	8"	ULMUSRUBRA
T-19	6"	FRAXINUSAMERICANA	T-76	6"	QUERCUSRUBRA	T-509	9"	PINUSSTROBUS	T-563	42"	PINUSSTROBUS	614B	14"	ACERNEGUNDO
T-20	32"	PINUSSTROBUS	T-77	18"	ACERSACCHARUM	T-510	28"	ACERRUBRUM	T-564	12"	ACERRUBRUM	T-615	16"	ACERNEGUNDO
T-21	9"	PINUSSTROBUS	T-78	9"	ACERSACCHARUM	T-511	16"	ACERRUBRUM	T-565	10"	ACERRUBRUM	T-616	18"	ACERRUBRUM
T-21	20"	PINUSSTROBUS	T-79	7"	FRAXINUSAMERICANA	T-512	24"	ACERRUBRUM	T-566	12"	ACERRUBRUM	T-617	10"	ACERRUBRUM
T-22	18"	QUERCUSRUBRA	T-80	10"	QUERCUSRUBRA	T-513	28"	ACERRUBRUM	T-568	18"	FRAXINUSAMERICANA	T-618	14"	ACERRUBRUM
T-24	24"	QUERCUSRUBRA	T-81	12"	POPULUSTREMULOIDES	T-514	10"	PINUSSTROBUS	T-569	12"	FRAXINUSAMERICANA	T-619	12"	ACERRUBRUM
T-25	6"	QUERCUSRUBRA	T-82	8"	QUERCUSRUBRA	T-515	12"	FRAXINUSAMERICANA	T-569	28"	FRAXINUSAMERICANA	T-620	9"	FAGUSGRANDIFOLIA
T-26	6"	ACERRUBRUM	T-83	23"	QUERCUSRUBRA	T-516	16"	ACERRUBRUM	T-570	18"	ACERRUBRUM	T-621	12"	FAGUSGRANDIFOLIA
T-27	6"	PINUSSTROBUS	T-84	8"	ACERRUBRUM	516A	27"	ACERRUBRUM	T-571	24"	ACERRUBRUM	T-622	11"	FAGUSGRANDIFOLIA
T-28	10"	NYSSASYLVATICA	T-85	6"	ACERRUBRUM	T-517	11"	ACERRUBRUM	T-572	12"	ACERRUBRUM	T-623	10"	FAGUSGRANDIFOLIA
T-29	20"	NYSSASYLVATICA	T-86	9"	ACERRUBRUM	T-518	25"	ACERRUBRUM	T-573	12"	ACERRUBRUM	T-624	9"	ACERRUBRUM
T-30	9"	PINUSSTROBUS	T-87	6"	ACERRUBRUM	T-519	22"	ACERRUBRUM	T-574	12"	FAGUSGRANDIFOLIA	T-625	7"	FAGUSGRANDIFOLIA
T-31	6"	BETULALENTA	T-88	8"	ACERRUBRUM	T-520	17"	ACERRUBRUM	T-575	7"	FAGUSGRANDIFOLIA	T-626	11"	ACERRUBRUM
T-32	12"	PINUSSTROBUS	T-89	8"	ACERRUBRUM	T-521	21"	ACERRUBRUM	T-576	18"	ACERNEGUNDO	T-627	12"	ACERRUBRUM
T-33	7"	PINUSSTROBUS	T-90	8"	ACERRUBRUM	T-522	13"	BETULALENTA	T-577	14"	ACERNEGUNDO	T-628	8"	ACERNEGUNDO
T-34	24"	ACERSACCHARINUM	T-91	11"	PINUSSTROBUS	T-523	11"	FAGUSGRANDIFOLIA	T-578	6"	ACERRUBRUM	T-629	18"	ACERNEGUNDO
T-35	8"	ACERRUBRUM	T-92	12"	PINUSSTROBUS	T-524	10"	ACERRUBRUM	T-579	10"	ACERRUBRUM	T-630	18"	ACERNEGUNDO
T-36	11"	ACERRUBRUM	T-93	10"	PINUSSTROBUS	T-525	8"	BETULAPOPULIFOLIA	T-580	12"	FRAXINUSAMERICANA	T-631	6"	FRAXINUSAMERICANA
T-37	18"	ACERRUBRUM	T-94	9"	PINUSSTROBUS	T-526	32"	ACERRUBRUM	T-582	6"	FRAXINUSAMERICANA	T-632	6"	FRAXINUSAMERICANA
T-38	34"	PINUSSTROBUS	T-95	9"	ACERRUBRUM	T-527	26"	ACERRUBRUM	T-583	15"	FAGUSGRANDIFOLIA	T-633	9"	FAGUSGRANDIFOLIA
T-39	18"	ACERRUBRUM	T-96	11"	ACERRUBRUM	T-528	32"	PINUSSTROBUS	T-583	14"	QUERCUSRUBRA	T-634	6"	FAGUSGRANDIFOLIA
T-40	18"	ACERRUBRUM	T-97	24"	PINUSSTROBUS	T-529	13"	PINUSSTROBUS	T-584	19"	QUERCUSRUBRA	T-635	14"	FAGUSGRANDIFOLIA
T-41	8"	BETULALENTA	T-98	26"	PINUSSTROBUS	T-530	11"	PINUSSTROBUS	T-585	13"	ACERNEGUNDO	T-636	15"	FAGUSGRANDIFOLIA
T-42	23"	ACERRUBRUM	T-99	18"	ACERRUBRUM	T-531	7"	PINUSSTROBUS	T-586	13"	POPULUSTREMULOIDES	T-637	6"	FRAXINUSAMERICANA
T-43	12"	QUERCUSRUBRA	T-100	12"	ACERRUBRUM	T-532	12"	PINUSSTROBUS	T-587	8"	ACERNEGUNDO	T-638	11"	ULMUSRUBRA
T-44	20"	ACERRUBRUM	T-101	9"	ACERRUBRUM	T-533	18"	PINUSSTROBUS	T-588	6"	ACERRUBRUM	T-639	24"	ACERNEGUNDO
T-45	9"	ACERRUBRUM	T-102	11"	ACERRUBRUM	T-534	15"	PINUSSTROBUS	T-589	12"	FRAXINUSAMERICANA	T-640	12"	ULMUSRUBRA
T-46	12"	ACERRUBRUM	T-103	28"	ACERRUBRUM	T-535	25"	PINUSSTROBUS	T-590	8"	FRAXINUSAMERICANA	T-641	9"	ACERNEGUNDO
T-47	9"	ACERRUBRUM	T-104	8"	ACERRUBRUM	T-536	22"	PINUSSTROBUS	T-591	10"	FRAXINUSAMERICANA	T-642	7"	QUERCUSRUBRA
T-48	13"	ACERRUBRUM	104A	6"	ACERRUBRUM	T-537	30"	PINUSSTROBUS	T-592	10"	FRAXINUSAMERICANA	T-643	15"	QUERCUSRUBRA
T-49	13"	ACERRUBRUM	T-105	10"	ACERRUBRUM	T-538	20"	PINUSSTROBUS	T-593	12"	FAGUSGRANDIFOLIA	T-644	6"	QUERCUSRUBRA
T-50	48"	ACERRUBRUM	T-106	6"	ACERRUBRUM	T-539	22"	PINUSSTROBUS	T-594	7"	ACERRUBRUM	T-645	7"	ACERRUBRUM
T-53	19"	--	T-107	10"	QUERCUSRUBRA	T-540	22"	PINUSSTROBUS	T-595	6"	ACERRUBRUM	T-646	7"	POPULUSTREMULOIDES
T-55	8"	PINUSSTROBUS	T-107	11"	QUERCUSRUBRA	T-541	15"	PINUSSTROBUS	T-596	16"	ACERRUBRUM	T-650	12"	ACERRUBRUM
T-56	18"	PINUSSTROBUS	T-108	7"	QUERCUSRUBRA	T-542	8"	PINUSSTROBUS	T-597	24"	ACERRUBRUM	T-651	18"	POPULUSTREMULOIDES



PROJECT LOCATION MAP

SCALE: NOT TO SCALE

SOURCE:
WWW.MAPS.MASSGIS.DIGITAL.MASS.GOV

40 0 10 20 40

SCALE: 1 INCH = 40 FEET

Date	Description	No.

Revisions

IAN C. WISURI DATE SIGNED
PROFESSIONAL LAND SURVEYOR
MA STATE LIC. No. 47403

LANGAN
Langan Engineering and Environmental Services, LLC.
100 Cambridge Street, Suite 1310
Boston, MA 02114
T: 617.824.9100 F: 617.824.9101 www.langan.com

Project
D+W MEDWAY MUNICIPAL
MEDWAY
SUFFOLK COUNTY MASSACHUSETTS

Prepared for
DORE + WHITTIER
260 MERRIMAC STREET, BLDNG 7, 2ND FL
NEWBURYPORT, MA 01950

Record Owner
NOW/FORMERLY
TOWN OF MEDWAY

Drawing Title
BOUNDARY & TOPOGRAPHIC SURVEY

Project No.
151072202
Date
JUNE 12, 2026
Drawn By
AJR / DRL
Checked By
ICW

VB102

Sheet 1 of 1

LANGAN
Project No. 151072202

© 2026 Langan



DECISION DATE: ____________________

ENDORSEMENT DATE: ____________________

MEDWAY PLANNING & ECONOMIC DEVELOPMENT BOARD

INVASIVE SPECIES REMOVAL NOTES:

JAPANESE KNOTWEED (REYNOUTRIA JAPONICA)

1. JAPANESE KNOTWEED HAS BEEN IDENTIFIED ON SITE IN THE LOCATIONS SHOWN ON THE PLANS. CONTRACTOR SHALL REMOVE ALL JAPANESE KNOTWEED AND ASSOCIATED RHIZOME MATERIAL IN ACCORDANCE WITH THESE NOTES AND APPLICABLE REGULATIONS, INCLUDING THE MASSACHUSETTS PROHIBITED PLANT LIST (MDAR).

2. PRIOR TO ANY SITE DISTURBANCE IN KNOTWEED AREAS, CONTRACTOR SHALL ESTABLISH AN EXCLUSION ZONE EXTENDING MINIMUM 10 FEET BEYOND THE VISIBLE EXTENT OF ABOVE-GROUND KNOTWEED GROWTH. NO GRADING, STOCKPILING, OR EQUIPMENT STAGING SHALL OCCUR WITHIN THE EXCLUSION ZONE UNTIL REMOVAL IS COMPLETE.

3. ALL ABOVE-GROUND KNOTWEED STEMS SHALL BE CUT AND REMOVED. SOIL CONTAINING RHIZOMES SHALL BE EXCAVATED TO A MINIMUM DEPTH OF 36 INCHES AND A MINIMUM LATERAL DISTANCE OF 10 FEET BEYOND THE OUTERMOST VISIBLE STEMS, OR UNTIL NON-ORGANIC SUBSOIL IS REACHED, WHICHEVER IS GREATER.

4. ALL EXCAVATED KNOTWEED MATERIAL (STEMS, RHIZOMES, AND CONTAMINATED SOIL) SHALL BE PLACED IN COVERED ROLL-OFF CONTAINERS AND DISPOSED OF AT A LICENSED LANDFILL OR INCINERATOR. CONTRACTOR SHALL PROVIDE DOCUMENTATION OF DISPOSAL FACILITY ACCEPTANCE AND WASTE MANIFESTS TO THE OWNER. ON-SITE COMPOSTING OF KNOTWEED MATERIAL IS PROHIBITED.

5. ALL EQUIPMENT USED IN KNOTWEED REMOVAL AREAS SHALL BE PRESSURE-WASHED WITHIN THE REMOVAL ZONE PRIOR TO USE IN OTHER AREAS OF THE SITE OR DEMOBILIZATION.

6. CONTRACTOR SHALL MONITOR THE REMOVAL AREA FOR REGROWTH FOR A MINIMUM PERIOD OF 24 MONTHS FOLLOWING COMPLETION OF REMOVAL. ANY REGROWTH SHALL BE TREATED BY A MASSACHUSETTS LICENSED PESTICIDE APPLICATOR USING AN APPROVED SYSTEMIC HERBICIDE. HERBICIDE APPLICATION WITHIN 100 FEET OF WETLAND RESOURCE AREAS SHALL COMPLY WITH THE MASSACHUSETTS WETLANDS PROTECTION ACT AND BE COORDINATED WITH THE MEDWAY CONSERVATION COMMISSION.

7. FOLLOWING CONFIRMATION OF SUCCESSFUL REMOVAL, THE AREA SHALL BE REVEGETATED WITH NATIVE SPECIES PER THE LANDSCAPE PLANTING PLAN.

DORE + WHITTIER
MASSACHUSETTS
260 MERRIMAC STREET BUILDING 7, 2ND FLOOR
NEWBURYPORT, MA 01950
P: (978) 499-2999

VERMONT
212 BATTERY STREET
BURLINGTON, VT 05401
P: (802) 863-1428

LANGAN
Langan Engineering and Environmental Services, LLC.
100 Cambridge Street, Suite 1310
Boston, MA 02114
T: 617.824.9100 F: 617.824.9101 www.langan.com

MEDWAY MUNICIPAL COMPLEX
120 MAIN STREET,
MEDWAY, MA 02053

PROJECT NUMBER: 151072201

SEAL AND SIGNATURE:
COMMONWEALTH OF MASSACHUSETTS
JOHN D. PLANTE
No. 38118
REGISTERED PROFESSIONAL ENGINEER

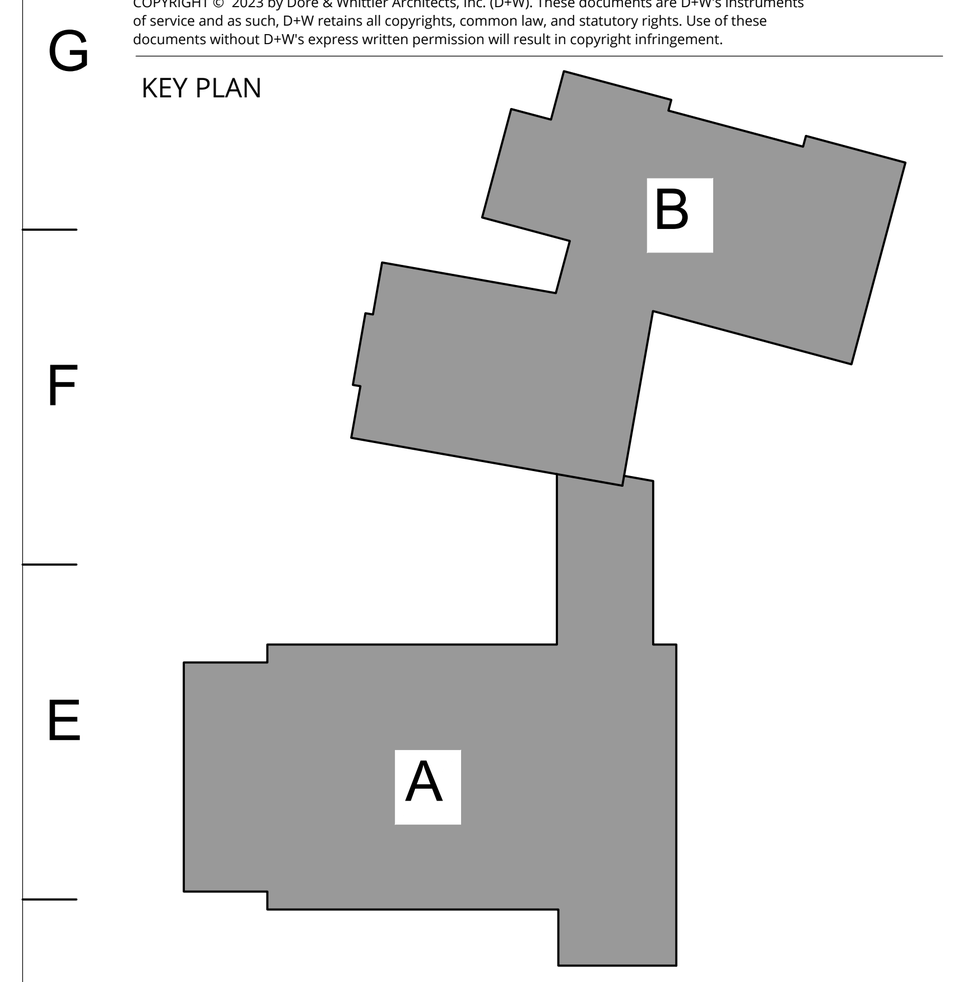
REVISIONS:

NO.	DATE	TITLE
1	09/18/2026	PEER REVIEW COMMENT RESPONSE

ISSUE TITLE AND DATE:
PERMIT DRAWINGS
7/20/2026

COPYRIGHT © 2023 by Dore & Whittier Architects, Inc. (D+W). These documents are D+W's instruments of service and as such, D+W retains all copyrights, common law, and statutory rights. Use of these documents without D+W's express written permission will result in copyright infringement.

KEY PLAN



ORIENTATION AND SCALE:
N
TRUE NORTH
PROJECT NORTH

18"X24" HALF-SIZE PRINT
SCALE: 1" = 60'

36"X48" FULL-SIZE PRINT
SCALE: 1" = 30'

SHEET TITLE:
SITE PREPARATION PLAN

SHEET NUMBER:
CD101



ZONING REQUIREMENTS

ZONE: CENTRAL BUSINESS (CB)
ABUTTING ZONE: AGRICULTURAL RESIDENTIAL II (AR-II)
PROPOSED USE: MUNICIPAL (ALLOWED BY RIGHT)

DESCRIPTION	REQUIRED	PROPOSED	SECTION
MINIMUM LOT AREA	10,000 SF	361,520 SF	SECTION 6.1, TABLE 2
MINIMUM LOT FRONTAGE	80 FT	353± FT [1]	TABLE 9.4.C.1.C.
MINIMUM FRONT SETBACK	10 FT	98± FT	SECTION 6.1, TABLE 2
MINIMUM SIDE SETBACK	10 FT 25 FT WHEN ABUTTING A RESIDENTAL DISTRICT	40± FT	SECTION 6.1, TABLE 2
MINIMUM REAR SETBACK	25 FT	30± FT	SECTION 6.1, TABLE 2
MINIMUM TRANSITIONAL BUFFER	75 FT	98± FT	SECTION 10.E.3
MAXIMUM BUILDING HEIGHT	70 FT	<70 FT	TABLE 9.4.C.1.C.
MAXIMUM LOT COVERAGE	80%	±13%	SECTION 6.1, TABLE 2
MAXIMUM IMPERVIOUS COVERAGE	N/A	±53%	SECTION 6.1, TABLE 2
MINIMUM OPEN SPACE	15%	±42%	SECTION 6.1, TABLE 2

[1] LOT HAS FRONTAGE ON MAIN STREET AND POND STREET. FOR THROUGH LOTS, ONLY ONE FRONT LOT LINE MAY BE USED TO MEET THE MINIMUM FRONTAGE LENGTH REQUIREMENT. FRONTAGE ALONG MAIN STREET IS SHORTER LENGTH.

PARKING REQUIREMENTS

DESCRIPTION	REQUIRED	PROPOSED	SECTION
QUANTITY OF PARKING SPACES FOR GOVERNMENTAL OFFICE	1 SPACE PER 300 SF = 100± SPACES	145 SPACES [2]	SECTION 7.1, TABLE 3
ADA SPACES	101–150 TOTAL SPACES = 5 ADA SPACES	8 SPACES	521 CMR 23
EV CHARGERS	101–150 TOTAL SPACES = 5 EV SPACES	16 SPACES [3]	SECTION 7.1.1.E.4
TOTAL EV PARKING	20% OF TOTAL SPACES = 29 SPACES	30 SPACES	SECTION 7.1.1.E.4
EV READY PARKING	TOTAL EV PARKING – EV CHARGERS = 14 SPACES	14 SPACES	SECTION 7.1.1.E.4
BICYCLE PARKING	1 SPACE PER 20 CAR PARKING SPACES = 8 SPACES	>8 SPACES	SECTION 7.1.1.I

[2] WAIVER REQUIRED. IN THE CENTRAL BUSINESS DISTRICT (CB) THE MINIMUM NUMBER OF OFF-STREET PARKING SPACES REQUIRED BY USE ON TABLE 3 IN SECTION 7.1.1.D. SHALL BE INTERPRETED TO BE BOTH THE MINIMUM AND THE MAXIMUM AMOUNT OF PARKING SPACES REQUIRED (SECTION 10.2.D.2.A).
[3] EV READY PARKING SPACES SHALL ALSO BE PROVIDED IN ACCORDANCE WITH 225 CMR CHAPTER 23 SECTION C405.13.

SPECIAL PERMIT REQUIRED FOR "FRONTAGE PARKING" BETWEEN BUILDING AND MAIN STREET (SECTION 7.1.1.K.4).

DECISION DATE: _____

ENDORSEMENT DATE: _____

MEDWAY PLANNING & ECONOMIC DEVELOPMENT BOARD

DORE + WHITTIER

MASSACHUSETTS
260 MERRIMAC STREET BUILDING 7, 2ND FLOOR
NEWBURYPORT, MA 01950
P: (978) 499-2999

VERMONT
212 BATTERY STREET
BURLINGTON, VT 05401
P: (802) 863-1428

LANGAN

Langan Engineering and Environmental Services, LLC.
100 Cambridge Street, Suite 1310
Boston, MA 02114
T: 617.824.9100 F: 617.824.9101 www.langan.com

PROJECT NUMBER:

SEAL AND SIGNATURE:

COMMONWEALTH OF MASSACHUSETTS — JOHN D. PLAITES — No. 36915 — REGISTERED PROFESSIONAL ENGINEER

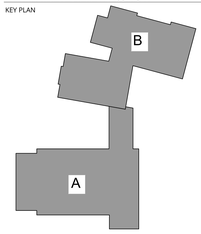
REVISIONS:

NO.	DATE	TITLE
1	09/18/2026	PEER REVIEW COMMENT RESPONSE

ISSUE TITLE AND DATE:
PERMIT DRAWINGS
7/20/2026

COPYRIGHT © 2023 by Dore & Whittier Architects, Inc. (D+W). These documents are D+W's instruments of service and as such, D+W retains all copyrights, common law, and statutory rights. Use of these documents without D+W's express written permission will result in copyright infringement.

KEY PLAN



ORIENTATION AND SCALE:

N TRUE NORTH
PROJECT NORTH

18"X24" HALF-SIZE PRINT
60 0 20 40 60
SCALE: 1" = 60'

36"X48" FULL-SIZE PRINT
30 0 15 30
SCALE: 1" = 30'

SHEET TITLE:

SITE PLAN

SHEET NUMBER:

CS101



DECISION DATE: ____________________

ENDORSEMENT DATE: ____________________

MEDWAY PLANNING & ECONOMIC DEVELOPMENT BOARD

DORE + WHITTIER

MASSACHUSETTS
260 MERRIMAC STREET BUILDING 7, 2ND FLOOR
NEWBURYPORT, MA 01950
P: (978) 499-2999

VERMONT
212 BATTERY STREET
BURLINGTON, VT 05401
P: (802) 863-1428

LANGAN

Langan Engineering and Environmental Services, LLC.
100 Cambridge Street, Suite 1310
Boston, MA 02114
T: 617.824.9100 F: 617.824.9101 www.langan.com

MEDWAY MUNICIPAL COMPLEX

120 MAIN STREET,
MEDWAY, MA 02053

PROJECT NUMBER: 151072201

SEAL AND SIGNATURE:

JOHN D. PLANTE — CIVIL — No. 38118 — COMMONWEALTH OF MASSACHUSETTS — REGISTERED PROFESSIONAL ENGINEER

REVISIONS:

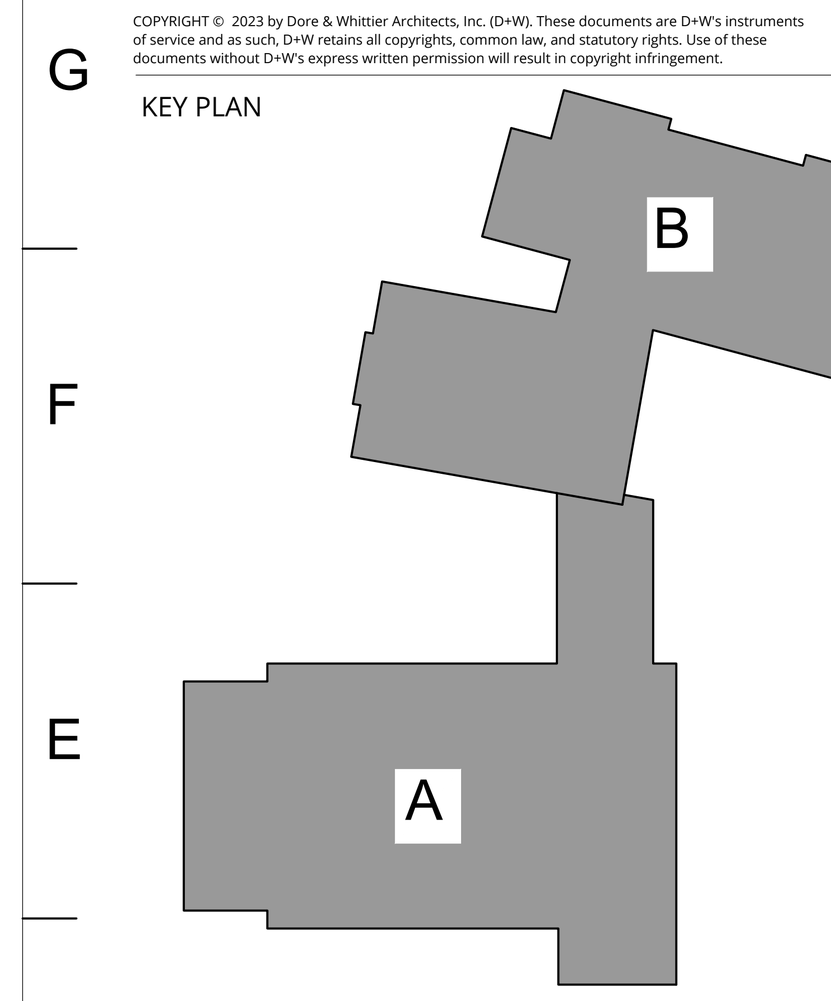
NO.	DATE	TITLE
1	09/18/2026	PEER REVIEW COMMENT RESPONSE

ISSUE TITLE AND DATE:

PERMIT DRAWINGS
7/20/2026

COPYRIGHT © 2023 by Dore & Whittier Architects, Inc. (D+W). These documents are D+W's instruments of service and as such, D+W retains all copyrights, common law, and statutory rights. Use of these documents without D+W's express written permission will result in copyright infringement.

KEY PLAN



ORIENTATION AND SCALE:

N — TRUE NORTH — PROJECT NORTH

18"x24" HALF-SIZE PRINT: 60 0 20 40 60 — SCALE: 1" = 60'

36"x48" FULL-SIZE PRINT: 30 0 15 30 — SCALE: 1" = 30'

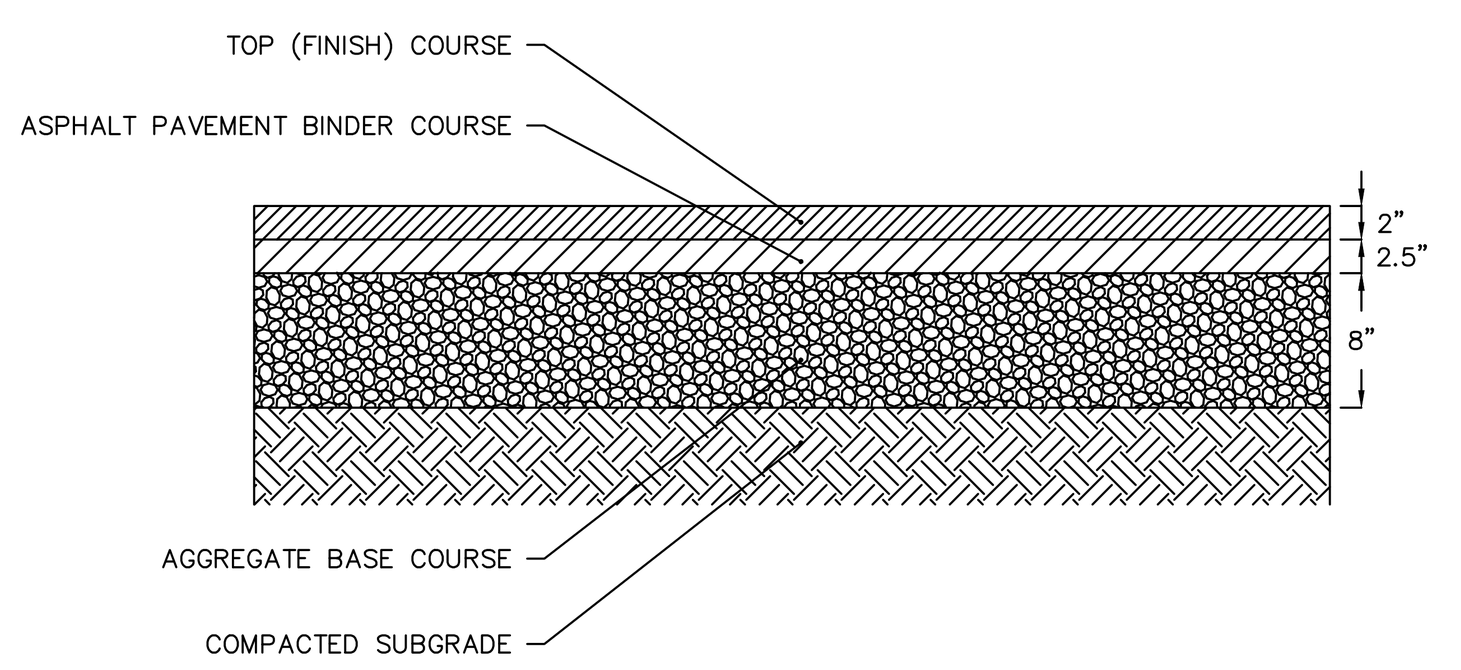
SHEET TITLE:

SITE PLAN ENLARGEMENT

SHEET NUMBER:

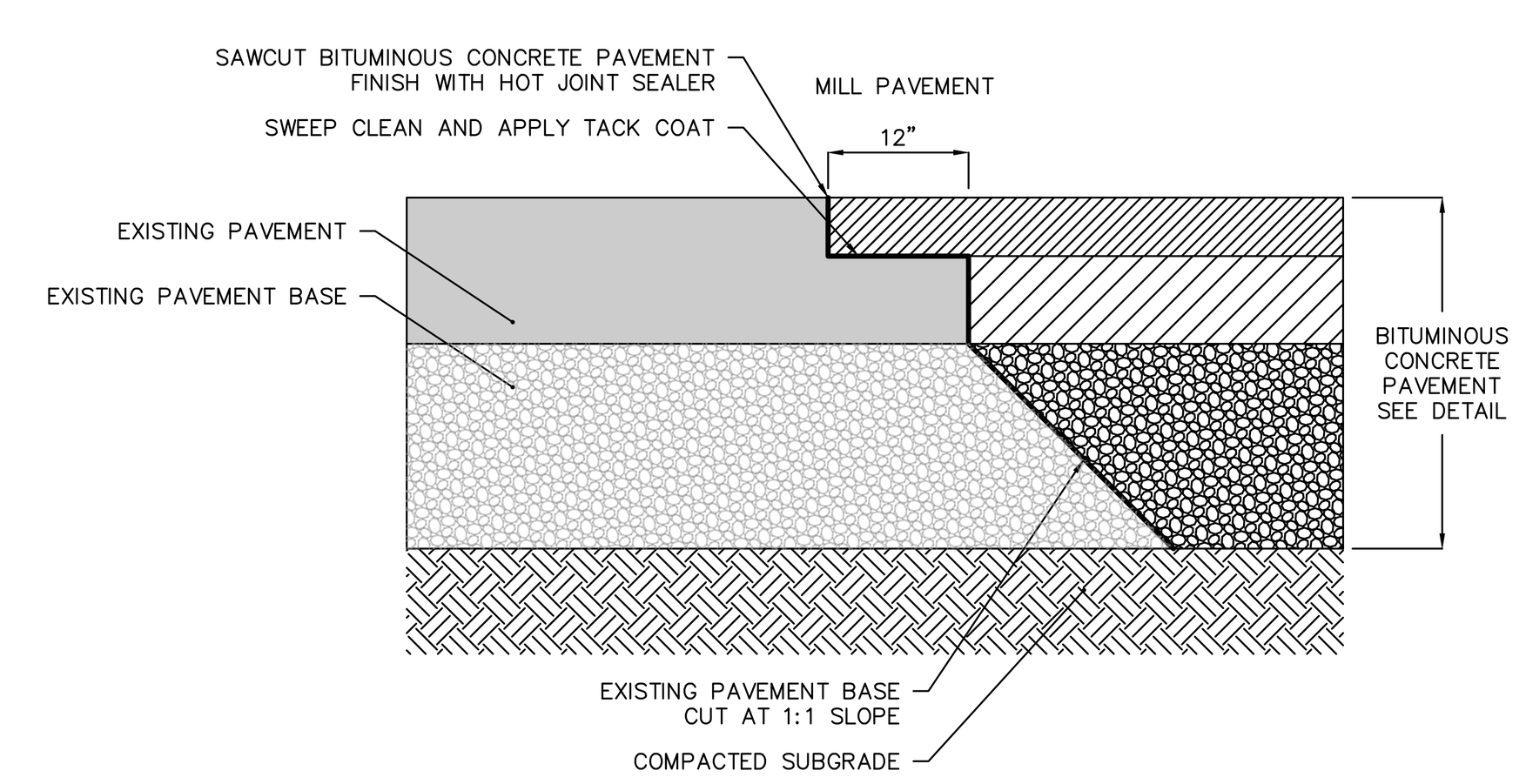
CS102

CONCRETE SECTION	SURFACE COURSE	BINDER COURSE	AGGREGATE BASE
STANDARD DUTY	2.0"	2.0"	8.0"
HEAVY DUTY	2.0"	4.0"	8.0"
PEDESTRIAN SIDEWALK	1.5"	1.5"	6.0"

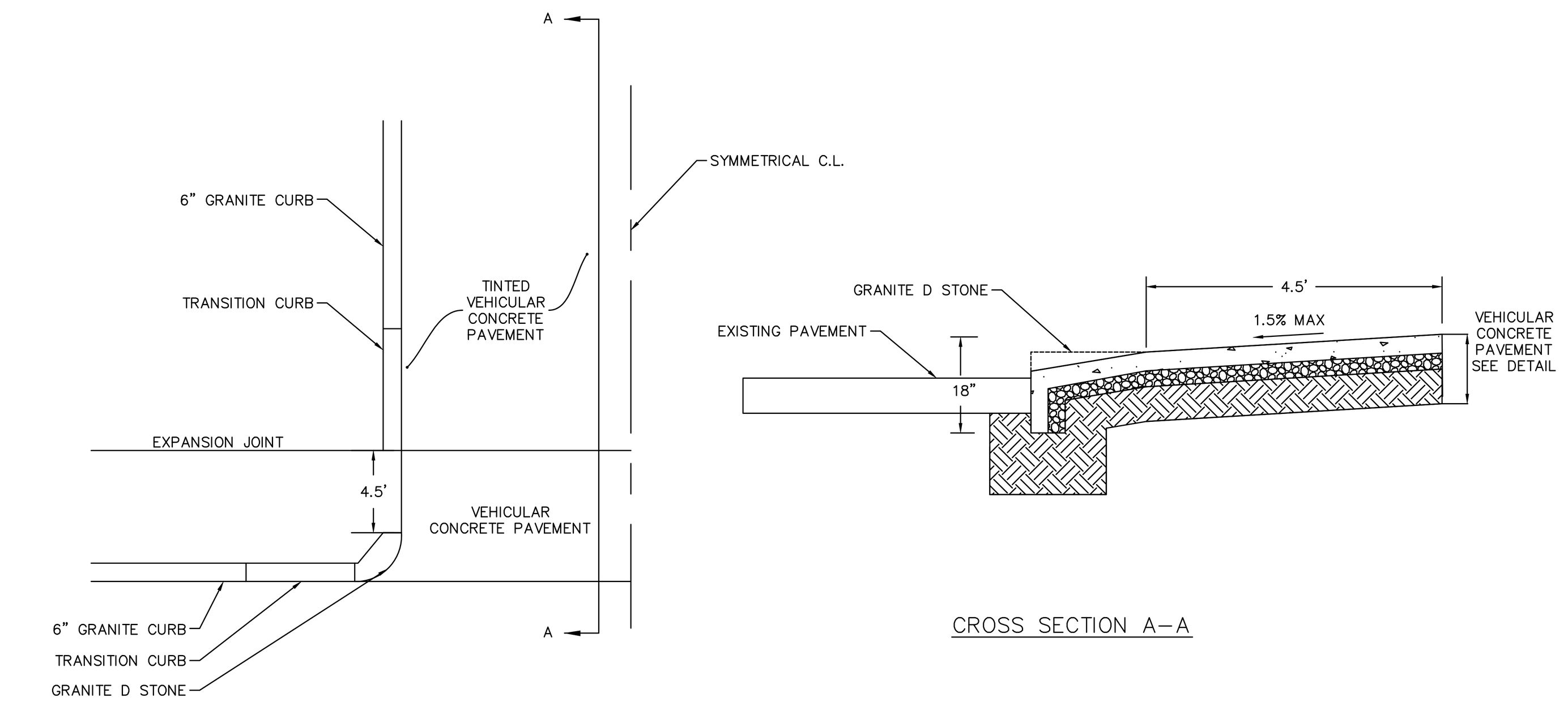


NOTES:
1. PAVEMENT CLASSES REFER TO MASSACHUSETTS DEPARTMENT OF TRANSPORTATION STANDARD SPECIFICATION (MDOT SS) M3.11.2. AGGREGATE BASE COURSE REFER TO M2.01.7 OR M1.03.1.
2. PRIOR TO ANY PAVING ACTIVITIES, SUBGRADE SHALL BE PROOF ROLLED WITH AT LEAST 6 OVERLAPPING PASSES USING A LARGE VIBRATORY ROLLER HAVING A MINIMUM STATIC DRUM WEIGHT OF 10 TONS.
3. SOFT AREAS IDENTIFIED DURING PROOF ROLLING SHALL BE REMOVED AND THE EXTENT OF REMOVAL SHALL BE DETERMINED BY A GEOTECHNICAL ENGINEER DURING CONSTRUCTION. REMOVED MATERIAL SHALL BE REPLACED WITH APPROVED STRUCTURAL FILL.
4. REFER TO GEOTECHNICAL REPORT TITLED "WESTWOOD FIRE STATION #1 AND AMERICAN LEGION" PREPARED BY LANGAN ENGINEERING AND ENVIRONMENTAL SERVICES DATED DECEMBER 17, 2024 FOR FURTHER DETAIL. IF ANY CONFLICTS IDENTIFIED, CONTACT GEOTECHNICAL ENGINEER PRIOR TO INSTALLATION

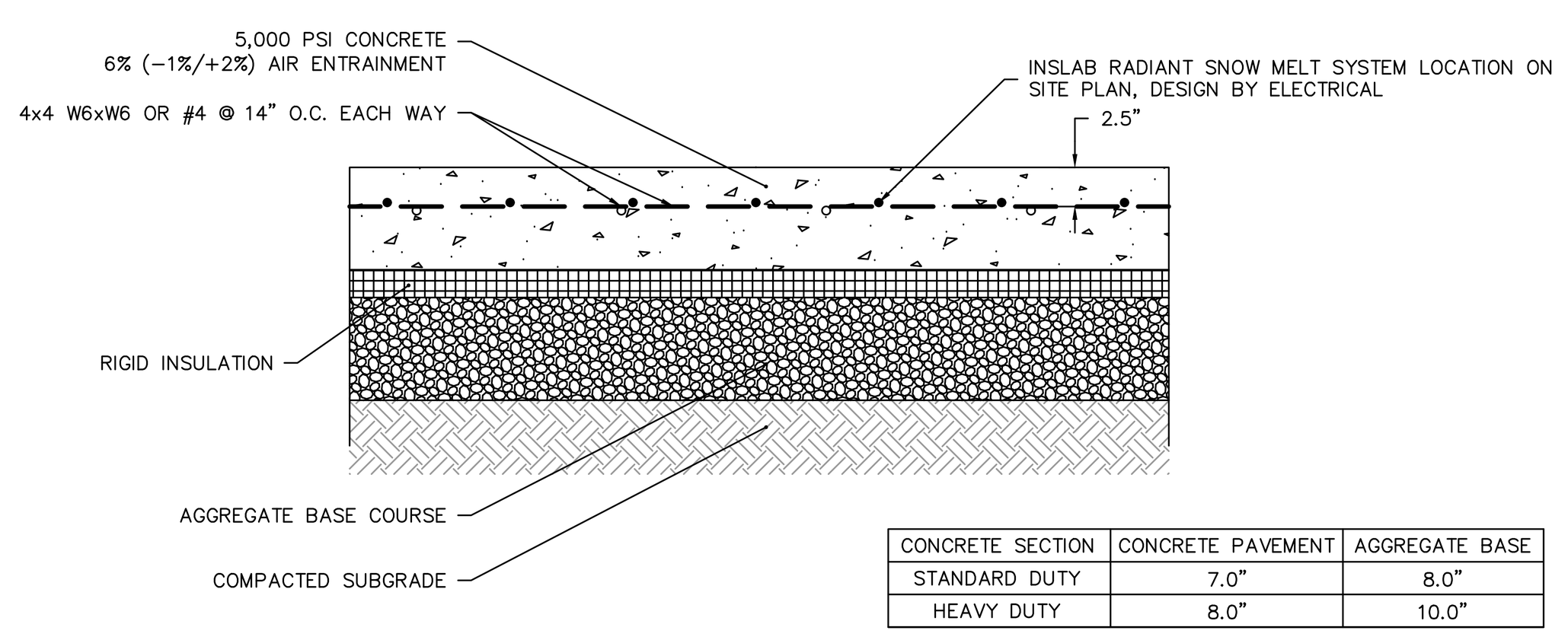
1 BITUMINOUS CONCRETE PAVEMENT
N.T.S.



2 SAWCUT PAVEMENT SECTION
N.T.S.



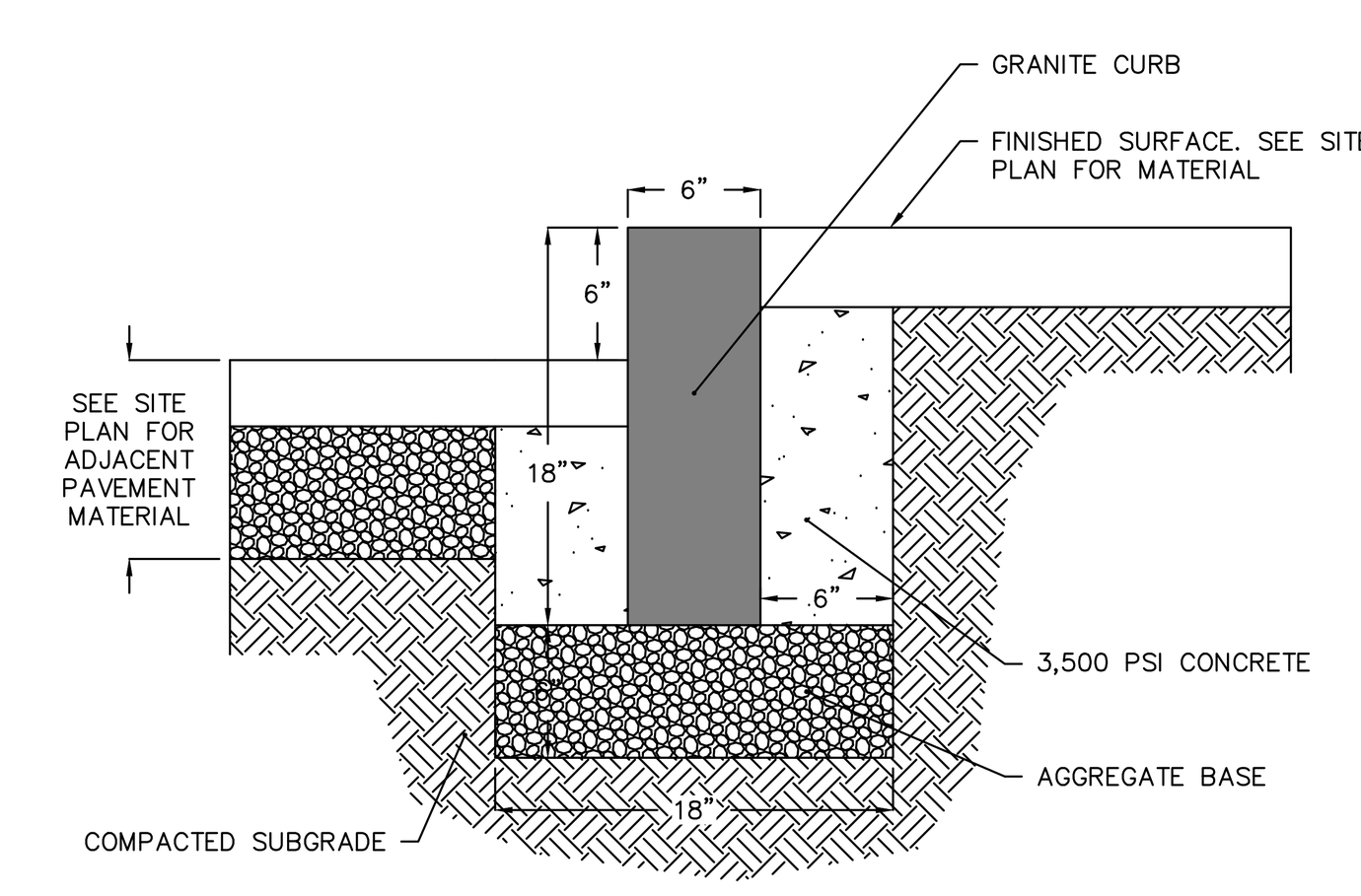
3 CONCRETE DRIVEWAY APRON
N.T.S.



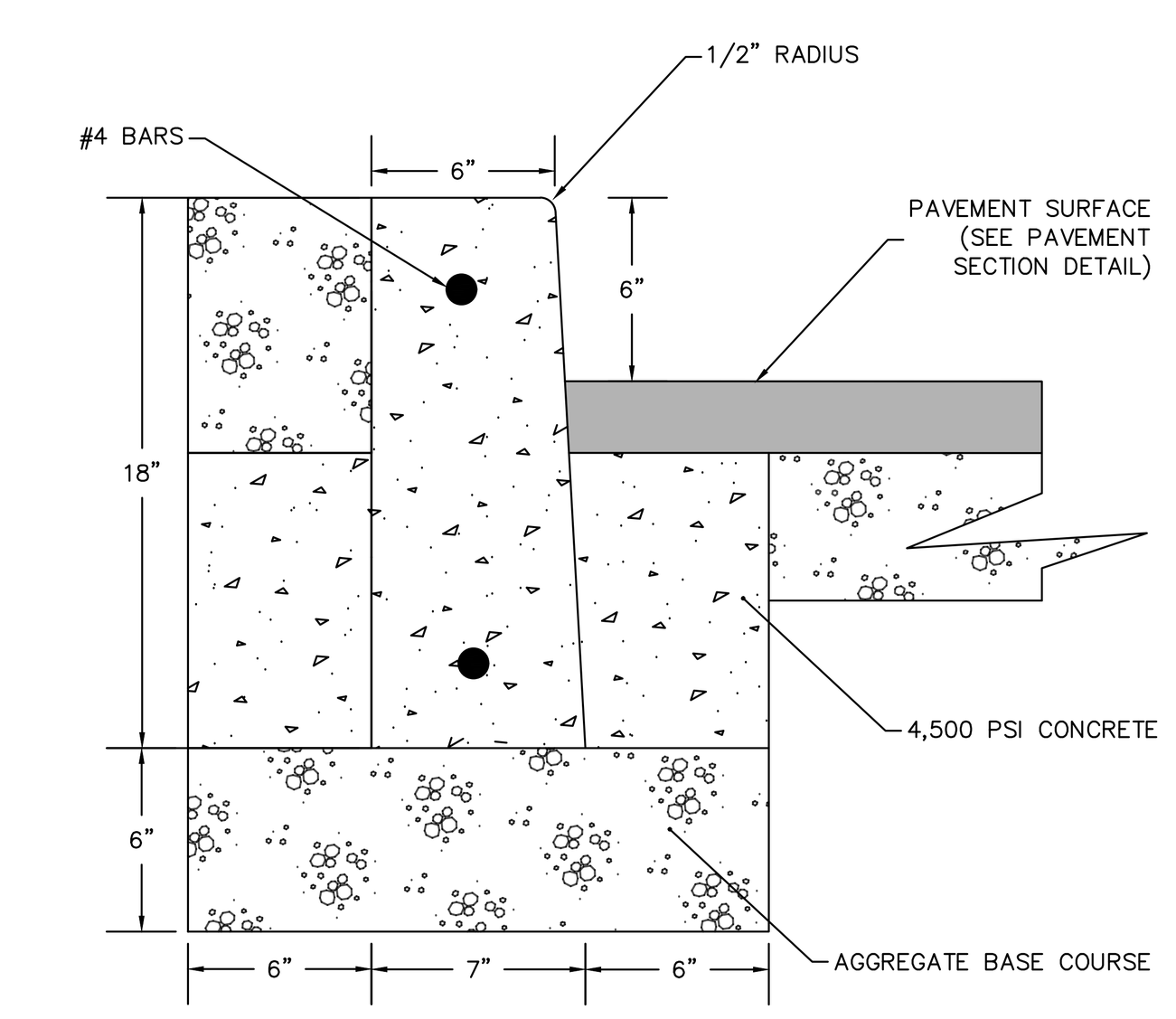
CONCRETE SECTION	CONCRETE PAVEMENT	AGGREGATE BASE
STANDARD DUTY	7.0"	8.0"
HEAVY DUTY	8.0"	10.0"

NOTES:
1. INSLAB RADIANT SNOW MELT SYSTEM SHALL BE INSTALLED PER ELECTRICAL DRAWINGS.
2. SURFACE TEXTURE SHALL BE A MEDIUM BROOM FINISH.
3. CONTROL JOINTS SHALL BE INSTALLED PER LAYOUT ON THE SITE PLAN, 5' MAXIMUM SPACING. PROVIDE EXPANSION JOINTS BETWEEN SLAB AND ALL ADJOINING BUILDING & SITE ELEMENTS AND AT CONSTRUCTION JOINTS. REFER TO CONCRETE JOINTS DETAIL FOR MORE INFORMATION. CONTRACTOR SHALL COORDINATE WITH ELECTRICAL PRIOR TO INSTALLING CONTROL JOINTS TO AVOID DAMAGE TO SNOW MELT.
4. CONCRETE PAVEMENT TO BE TREATED WITH A PENETRATING SEALER THAT MEETS THE PERFORMANCE STANDARDS OF NCHRP 244 AND SS-W-110 C SPECIFICATIONS AND COMPLIES WITH ALL U.S. EPA AND LOCAL VOC REGULATION.
5. PRIOR TO ANY PAVING ACTIVITIES, SUBGRADE SHALL BE PROOF ROLLED WITH AT LEAST 6 OVERLAPPING PASSES USING A LARGE VIBRATORY ROLLER HAVING A MINIMUM STATIC DRUM WEIGHT OF 10 TONS.
6. SOFT AREAS IDENTIFIED DURING PROOF ROLLING SHALL BE REMOVED AND THE EXTENT OF REMOVAL SHALL BE DETERMINED BY A GEOTECHNICAL ENGINEER DURING CONSTRUCTION. MATERIAL SHALL BE REPLACED WITH APPROVED STRUCTURAL FILL.
7. REFER TO LATEST GEOTECHNICAL ENGINEERING STUDY TITLED "MEDWAY MUNICIPAL COMPLEX" BY LANGAN FOR FURTHER DETAIL. IF ANY CONFLICTS IDENTIFIED, CONTACT GEOTECHNICAL ENGINEER PRIOR TO INSTALLATION.
8. REFER TO STRUCTURAL FOUNDATION SECTION DETAILS FOR INTERFACE WITH BUILDING FOUNDATION.
9. COLORING PIGMENT SHALL BE A CONCENTRATED PIGMENT SPECIALLY PROCESSED FOR MIXING INTO CONCRETE AND CONFORMING TO ASTM C979. PROVIDE COLOR CHART FOR OWNER TO REVIEW. FINAL COLOR SHALL BE APPROVED BY OWNER.

4 CONCRETE PAVEMENT
N.T.S.

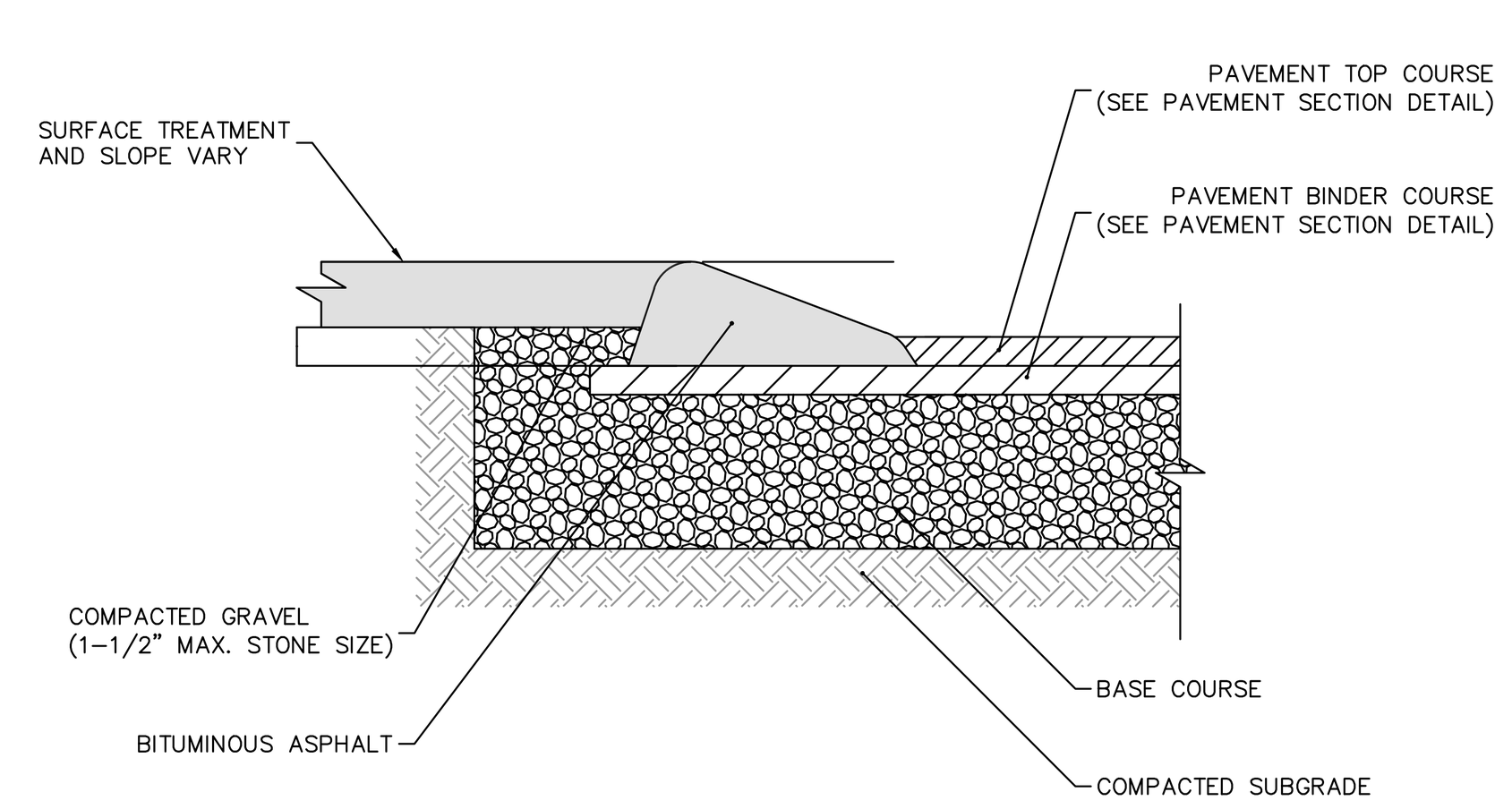


5 VERTICAL GRANITE CURB
N.T.S.

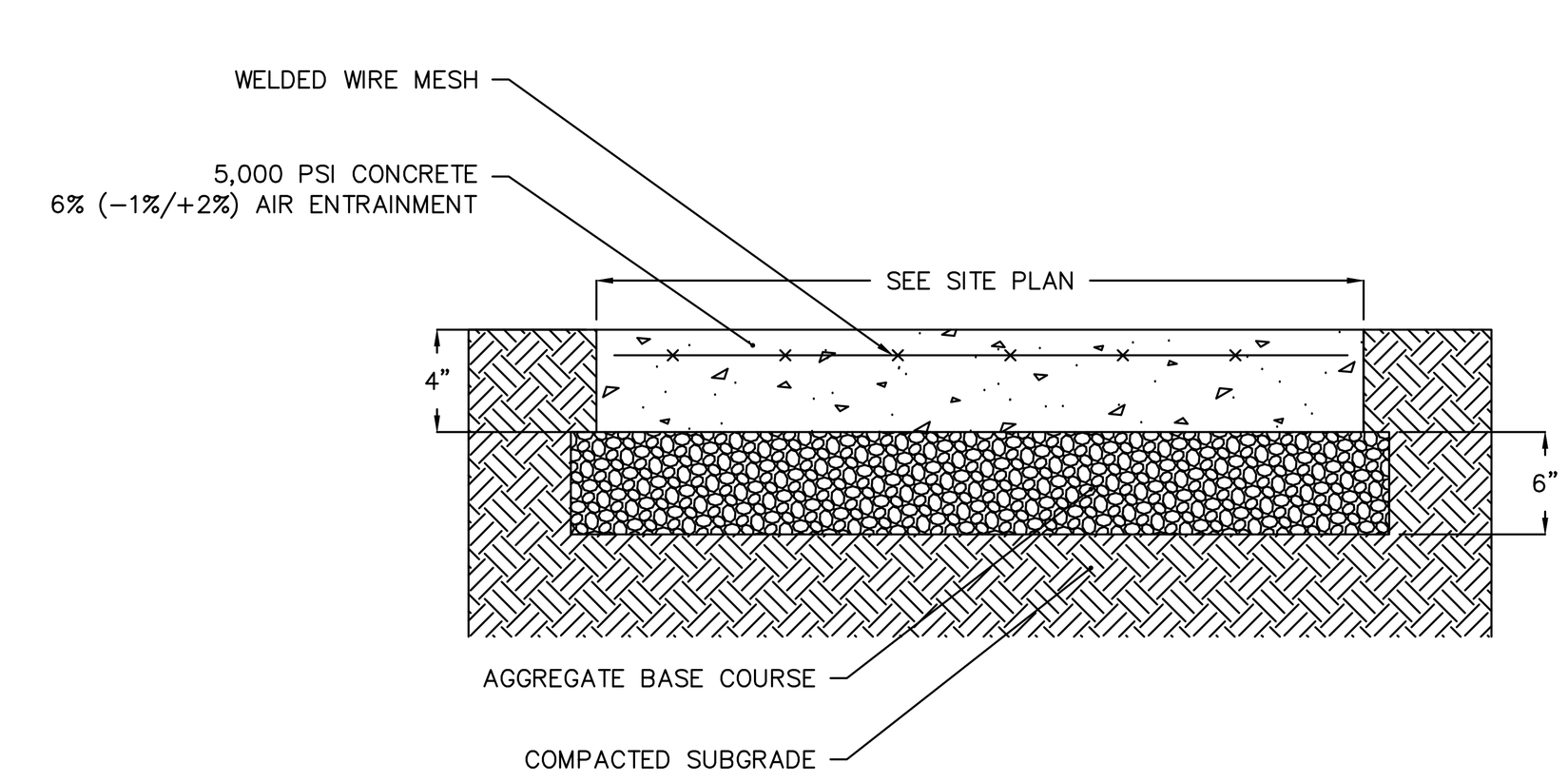


NOTES:
1. CONCRETE TO TEST 4,500 PSI MINIMUM ON 28 DAY TEST. AIR ENTRAINMENT 5% TO 7%.
2. ALL RADII TO BE SET IN 12" OF CONCRETE.
3. GROUT ALL JOINTS.

6 CONCRETE CURB
N.T.S.

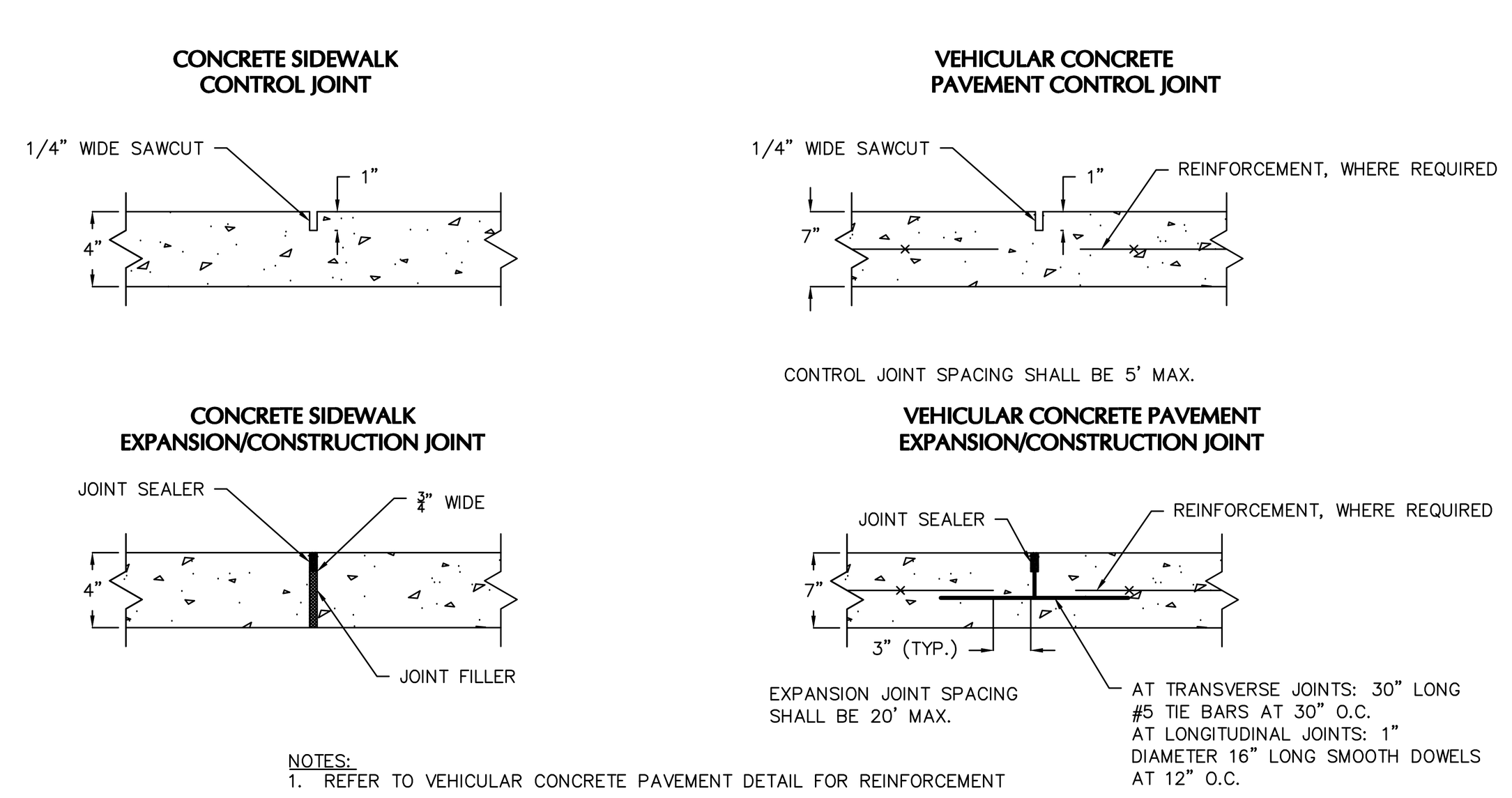


7 CAPE COD BERM
N.T.S.



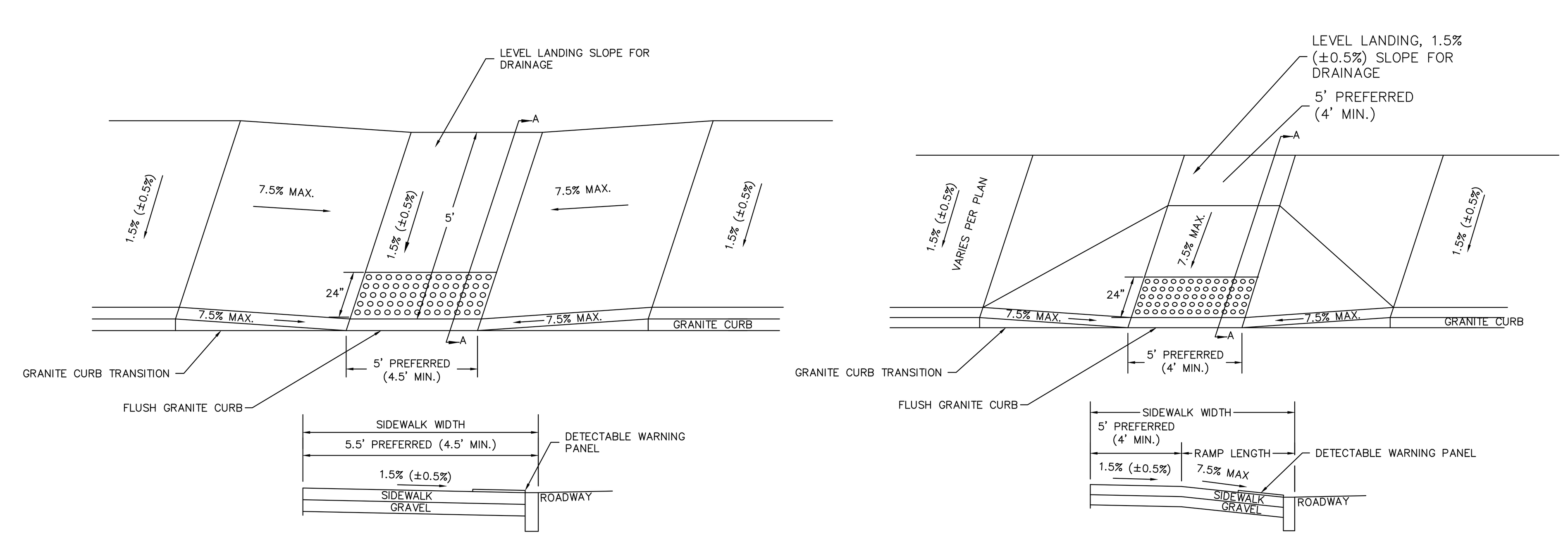
NOTES:
1. CONTROL JOINTS SHALL BE INSTALLED PER LAYOUT ON THE SITE PLAN, 5' MAXIMUM SPACING. PROVIDE EXPANSION JOINTS BETWEEN SLAB AND ALL ADJOINING BUILDING & SITE ELEMENTS AND AT CONSTRUCTION JOINTS. REFER TO CONCRETE JOINTS DETAIL FOR MORE INFORMATION
2. SURFACE TEXTURE SHALL BE LIGHT BROOM FINISH, TRANSVERSE TO THE LENGTH OF THE WALK

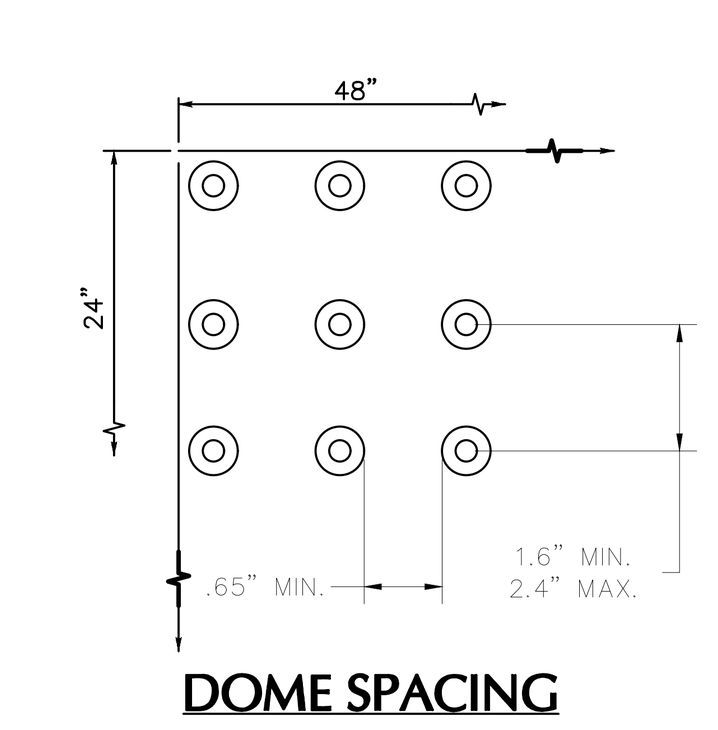
8 CONCRETE SIDEWALK
N.T.S.

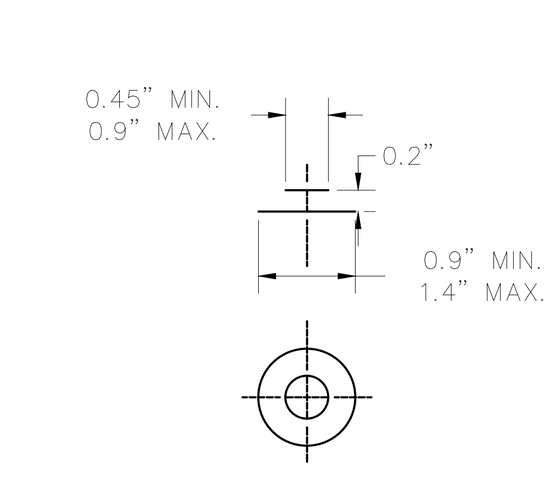


NOTES:
1. REFER TO VEHICULAR CONCRETE PAVEMENT DETAIL FOR REINFORCEMENT

9 CONCRETE JOINTS
N.T.S.







NOTES:
1. DOME WARNING PANELS SHALL BE BRICK RED IN COLOR PER CITY OF MEDWAY SPECIFICATIONS.

10 ADA CURB RAMPS AND DETECTABLE WARNING PANEL
N.T.S.

DECISION DATE: ____________________

ENDORSEMENT DATE: ____________________

MEDWAY PLANNING & ECONOMIC DEVELOPMENT BOARD

DORE + WHITTIER
MASSACHUSETTS
260 MERRIMAC STREET BUILDING 7, 2ND FLOOR
NEWBURYPORT, MA 01950
P: (978) 499-2999

VERMONT
212 BATTERY STREET
BURLINGTON, VT 05401
P: (802) 863-1428

LANGAN
Langan Engineering and Environmental Services, LLC.
100 Cambridge Street, Suite 1310
Boston, MA 02114
T: 617.824.9100 F: 617.824.9101 www.langan.com

MEDWAY MUNICIPAL COMPLEX
120 MAIN STREET,
MEDWAY, MA 02053

PROJECT NUMBER: 151072201

SEAL AND SIGNATURE:



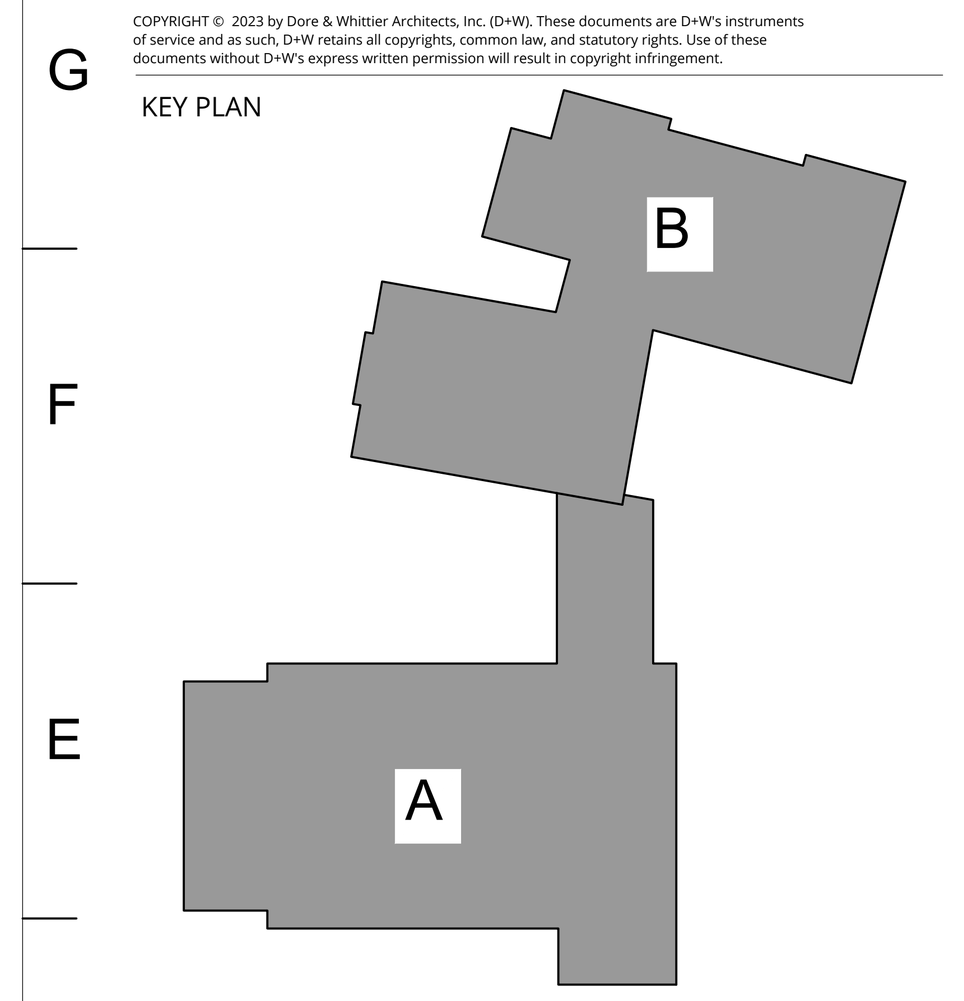
REVISIONS:

NO.	DATE	TITLE
1	09/18/2026	PEER REVIEW COMMENT RESPONSE

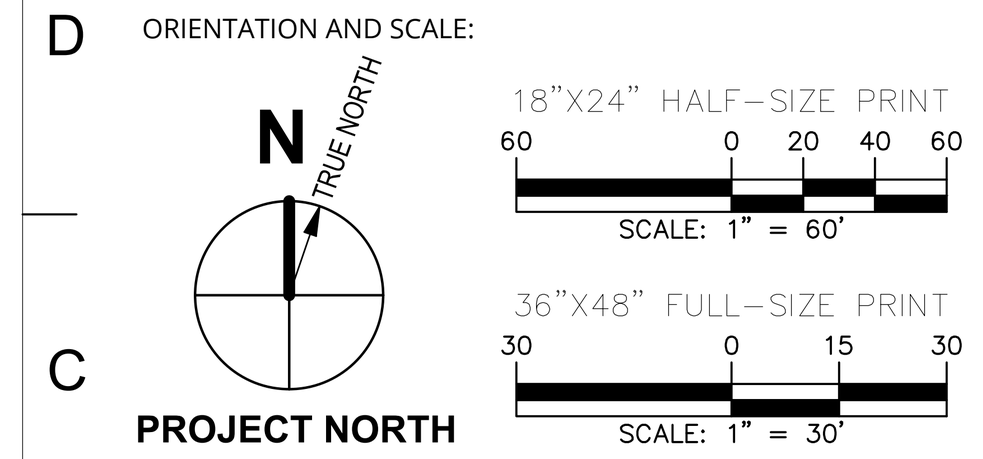
ISSUE TITLE AND DATE:
PERMIT DRAWINGS
7/20/2026

COPYRIGHT © 2023 by Dore & Whittier Architects, Inc. (D+W). These documents are D+W's instruments of service and as such, D+W retains all copyrights, common law, and statutory rights. Use of these documents without D+W's express written permission will result in copyright infringement.

KEY PLAN

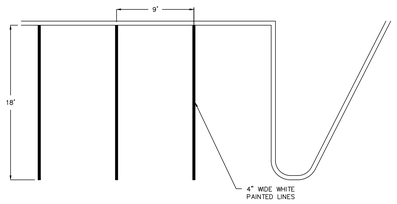


ORIENTATION AND SCALE:



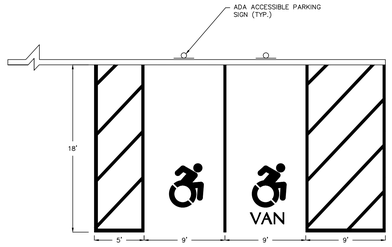
SHEET TITLE:
SITE DETAILS I

SHEET NUMBER:
CS501



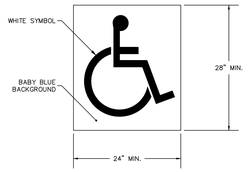
NOTES:
1. ALL PAINT SHALL BE FAST DRYING TRAFFIC PAINT AND SHALL BE APPLIED AS SPECIFIED BY THE MANUFACTURER

1 PARKING STALL STRIPING
N.T.S.



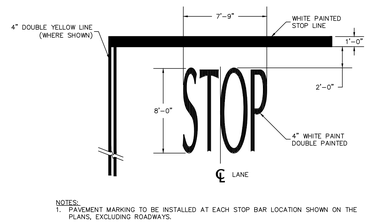
NOTES:
1. ADA STALL STRIPING PAINT SHALL BE FAST DRYING TRAFFIC PAINT, MEETING THE REQUIREMENTS OF AASHTO M248 TYPE F. PAINT SHALL BE APPLIED AS SPECIFIED BY THE MANUFACTURER.
2. SYMBOLS & PARKING STALLS SHALL CONFORM TO THE REQUIREMENTS OF THE AMERICAN DISABILITIES ACT (ADA) AND THE MANUAL ON UNIFORM TRAFFIC CONTROL DEVICES (MUTCD), LATEST EDITION.

2 ADA PARKING STALL STRIPING
N.T.S.



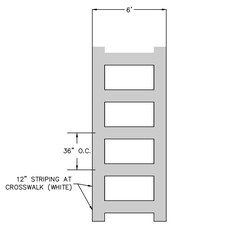
NOTES:
1. PLACE SYMBOL CENTERLINE OF STALL
2. WIDTH MINIMUM 4 INCHES

3 ACCESSIBLE PARKING SYMBOL
N.T.S.



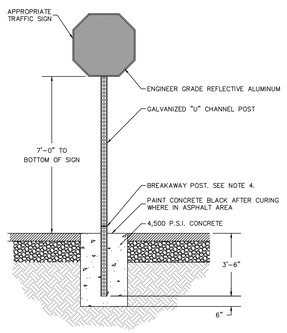
NOTES:
1. PAVEMENT MARKING TO BE INSTALLED AT EACH STOP BAR LOCATION SHOWN ON THE PLANS, EXCLUDING ROADWAYS.

4 STOP BAR
N.T.S.



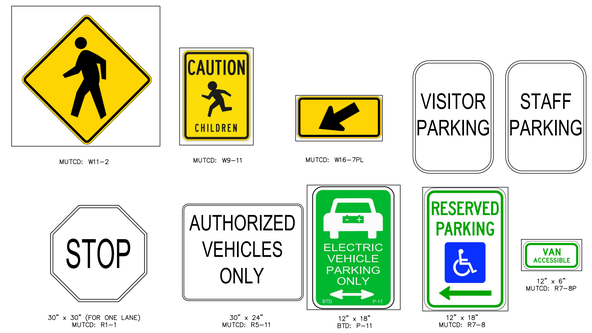
NOTES:
1. TWO COATS OF TRAFFIC TYPE PAINT SHALL BE USED FOR CROSSWALK STRIPING. ALLOW FOR MINIMUM CURE TIME OF 24 HOURS BETWEEN APPLICATIONS.
2. APPLY TWO COATS OF SAME COLOR, PER MANUFACTURER'S RECOMMENDED RATE, TO PROVIDE A MINIMUM TOTAL DRY FILM THICKNESS OF 15 MILS, WITH DRY FILM THICKNESS OF 7.5 MILS PER COAT.
3. APPLY GLASS BEADS AT PEDESTRIAN CROSSWALK STRIPING AND AT LANE STRIPING AND ARROWS AT DRIVEWAYS CONNECTING TO PUBLIC STREETS. BROADCAST GLASS BEADS UNIFORMLY INTO WET MARKINGS AT A RATE OF 6 LB./GAL.

5 CROSSWALK
N.T.S.

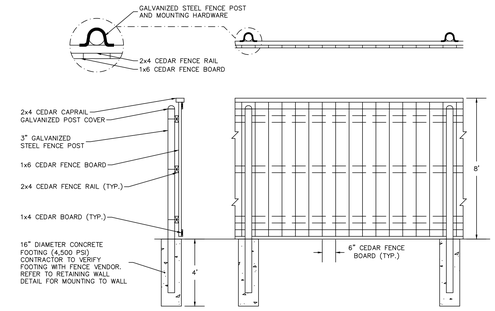


NOTES:
1. ALL POSTS SHALL BE OF ADEQUATE LENGTH TO MEET THE REQUIREMENTS FOR ERECTION AS STATED IN THE CURRENT "MANUAL ON UNIFORM TRAFFIC CONTROL DEVICES FOR STREETS AND HIGHWAYS".
2. ALL POSTS SHALL BE EMBEDDED 3'-6" MINIMUM BELOW GRADE.
3. ALL STEEL POSTS AND BRACKETS SHALL BE CUT, BENT, AND HOLES PUNCHED AND DRILLED BEFORE GALVANIZING. GALVANIZING SHALL BE IN CONFORMANCE WITH CURRENT A.S.T.M. SPECIFICATION A123-78 (OR LATEST REVISED).
4. POSTS SHALL BE BREAKAWAY TYPE II TWO-PIECE U-POST OR OTHER BREAKAWAY STRUCTURAL SUPPORT HARDWARE AS NOTED IN THE LATEST EDITION OF AASHTO'S "SPECIFICATIONS FOR STRUCTURAL SUPPORTS FOR HIGHWAY SIGNS, LUMINARIES, AND TRAFFIC SIGNALS."
5. SIGN PANEL SIZES SHALL DETERMINE POST TYPE AND NUMBERS AS SHOWN ON THIS DETAIL SHEET.
6. BOLTS SHALL NOT PROTRUDE MORE THAN 3/4" BEYOND THE NUT WHEN TIGHT BUT SHALL ENGAGE ALL THREADS IN THE NUT.
7. ALL TRAFFIC AND PEDESTRIAN SIGNAGE AND LOCATION SHALL BE IN ACCORDANCE WITH THE MANUAL ON UNIFORM TRAFFIC CONTROL DEVICES AND ALL CURRENT AMENDMENTS.

6 POST-MOUNTED SIGN
N.T.S.

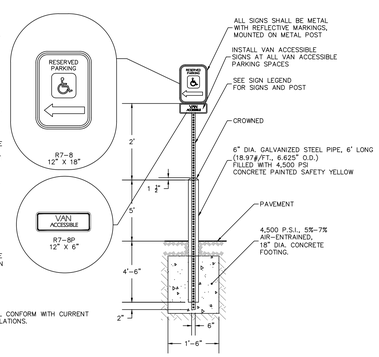


7 SITE SIGNAGE
N.T.S.



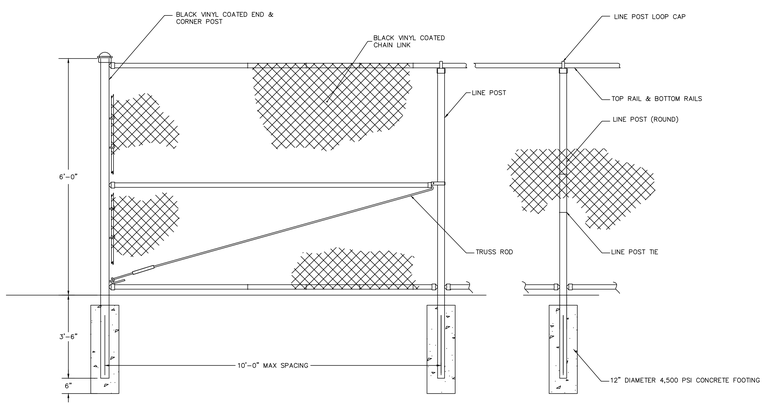
8 CEDAR FENCE
N.T.S.

NOTES:
1. ALL POSTS SHALL BE OF ADEQUATE LENGTH TO MEET THE REQUIREMENTS FOR ERECTION AS STATED IN THE CURRENT "MANUAL ON UNIFORM TRAFFIC CONTROL DEVICES FOR STREETS AND HIGHWAYS".
2. ALL POSTS SHALL BE EMBEDDED 4'-6" MINIMUM BELOW GRADE.
3. ALL STEEL POSTS AND BRACKETS SHALL BE CUT, BENT, AND HOLES PUNCHED AND DRILLED BEFORE GALVANIZING. GALVANIZING SHALL BE IN CONFORMANCE WITH CURRENT A.S.T.M. SPECIFICATION A123-78 (OR LATEST REVISED).
4. POSTS SHALL BE BREAKAWAY TYPE II TWO-PIECE U-POST OR OTHER BREAKAWAY STRUCTURAL SUPPORT HARDWARE AS NOTED IN THE LATEST EDITION OF AASHTO'S "SPECIFICATIONS FOR STRUCTURAL SUPPORTS FOR HIGHWAY SIGNS, LUMINARIES, AND TRAFFIC SIGNALS."
5. SIGN PANEL SIZES SHALL DETERMINE POST TYPE AND NUMBERS AS SHOWN ON THIS DETAIL AND DIRECTIONAL SIGN SHEET.
6. BOLTS SHALL NOT PROTRUDE MORE THAN 3/4" BEYOND THE NUT WHEN TIGHT BUT SHALL ENGAGE ALL THREADS IN THE NUT.



HANDICAPPED PARKING SIGN SHALL CONFORM WITH CURRENT STATE & LOCAL CODES AND REGULATIONS.

9 BOLLARD-MOUNTED ADA SIGNAGE
N.T.S.



10 CHAIN-LINK FENCE
N.T.S.

DECISION DATE: _____

ENDORSEMENT DATE: _____

MEDWAY PLANNING & ECONOMIC DEVELOPMENT BOARD

DORE + WHITTIER
MASSACHUSETTS
260 MERRIMAC STREET BUILDING 7, 2ND FLOOR
NEWBURYPORT, MA 01950
P: (978) 499-2999
VERMONT
212 BATTERY STREET
BURLINGTON, VT 05401
P: (802) 863-1428

LANGAN
Langan Engineering and Environmental Services, LLC.
100 Cambridge Street, Suite 1310
Boston, MA 02114
T: 617.824.9100 F: 617.824.9101 www.langan.com

MEDWAY MUNICIPAL COMPLEX
120 MAIN STREET,
MEDWAY, MA 02053

PROJECT NUMBER: 151072201

SEAL AND SIGNATURE:

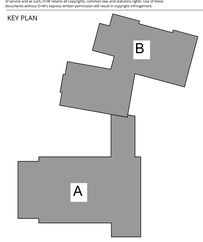
REVISIONS:

NO.	DATE	TITLE
1	09/18/2026	PEER REVIEW COMMENT RESPONSE

ISSUE TITLE AND DATE:
PERMIT DRAWINGS
7/20/2026

COPYRIGHT © 2023 by Dore & Whittier Architects, Inc. (D+W). These documents are D+W's instruments of service and as such, D+W retains all copyrights, common law, and statutory rights. Use of these documents without D+W's express written permission will result in copyright infringement.

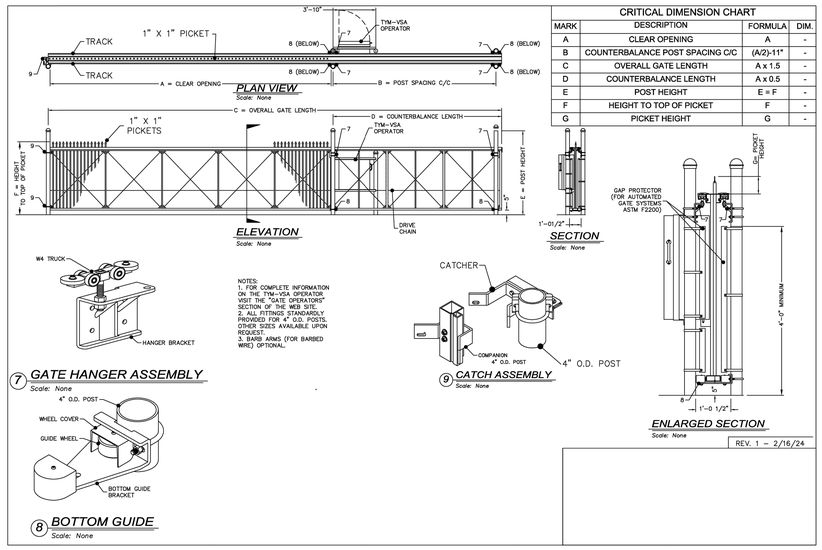
KEY PLAN



ORIENTATION AND SCALE:
PROJECT NORTH
18"X24" HALF-SIZE PRINT
SCALE: 1" = 60'
36"X48" FULL-SIZE PRINT
SCALE: 1" = 30'

SHEET TITLE:
SITE DETAILS II

SHEET NUMBER:
CS502

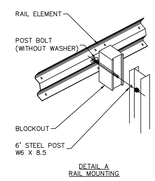


CRITICAL DIMENSION CHART			
MARK	DESCRIPTION	FORMULA	DIM.
A	CLEAR OPENING	A	-
B	COUNTERBALANCE POST SPACING C/C	(A/2)+11"	-
C	OVERALL GATE LENGTH	A x 1.5	-
D	COUNTERBALANCE LENGTH	A x 0.5	-
E	POST HEIGHT	E = F	-
F	HEIGHT TO TOP OF PICKET	F	-
G	PICKET HEIGHT	G	-

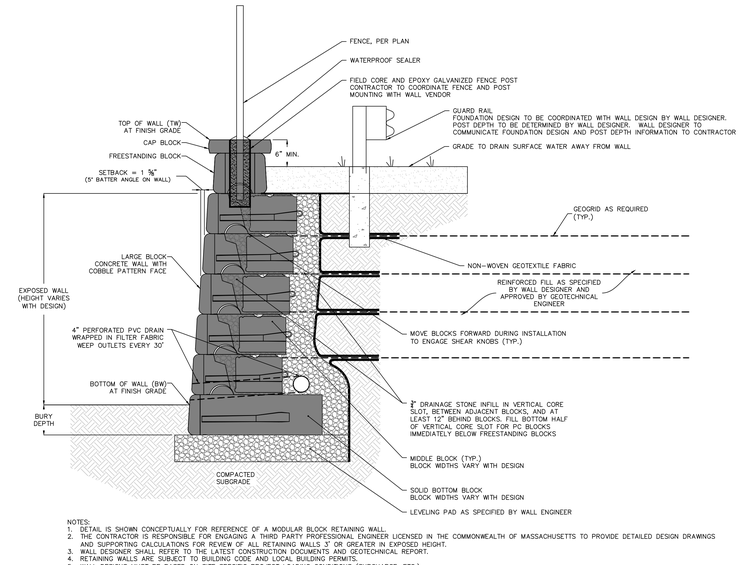
REV. 1 – 2/16/24

NOTE:
1. REFER TO ELECTRICAL PLANS FOR MOTOR AND LONG RANGE CARD READER.

1 HEAVY DUTY SLIDE GATE
N.T.S.



DETAIL A
RAIL MOUNTING



NOTES:
1. DETAIL IS SHOWN CONCEPTUALLY FOR REFERENCE OF A MODULAR BLOCK RETAINING WALL.
2. THE CONTRACTOR IS RESPONSIBLE FOR ENGAGING A THIRD PARTY PROFESSIONAL ENGINEER LICENSED IN THE COMMONWEALTH OF MASSACHUSETTS TO PROVIDE DETAILED DESIGN DRAWINGS AND SUPPORTING CALCULATIONS FOR REVIEW OF ALL RETAINING WALLS 3' OR GREATER IN EXPOSED HEIGHT.
3. WALL DESIGNER SHALL REFER TO THE LATEST CONSTRUCTION DOCUMENTS AND GEOTECHNICAL REPORT.
4. RETAINING WALLS ARE SUBJECT TO BUILDING CODE AND LOCAL BUILDING PERMITS.
5. WALL DESIGNS MUST BE BASED ON SITE SPECIFIC PROJECT LOADING CONDITIONS (SURCHARGE, ETC.).
6. WALL DESIGNER IS RESPONSIBLE FOR INTERNAL STABILITY ANALYSIS, EXTERNAL STABILITY ANALYSIS, AND ESTABLISHING A DESIGN GROUNDWATER ELEVATION FOR THE WALL BASED ON PROPOSED CONSTRUCTION ACTIVITIES, SITE INFILTRATION, AND DRAINAGE.
7. REQUIREMENTS FOR WALL BASE MATERIAL, FOUNDATION, GROUND IMPROVEMENTS (AS NEEDED), FILL MATERIAL, WALL, AND GEOGRID TO BE PROVIDED BY THE WALL DESIGNER.
8. INSPECTIONS ARE TO BE CONDUCTED IN ACCORDANCE WITH PROJECT DOCUMENTS AND THE SCHEDULE OF SPECIAL INSPECTIONS INCLUDING SUBGRADE, BACKFILL, GEOGRID, BLOCK TYPE, AND DRAINAGE.
9. SUBGRADE TO BE PREPARED IN ACCORDANCE WITH THE LATEST CONSTRUCTION DOCUMENTS AND GEOTECHNICAL REPORT PRIOR TO WALL CONSTRUCTION AND FILL PLACEMENT.
10. WALL DESIGNER TO ACCOUNT FOR ALL PENETRATIONS WITHIN ZONE OF INFLUENCE IN WALL DESIGN. MISCELLANEOUS STRUCTURES AND UTILITIES WITHIN REINFORCED ZONE TO BE COORDINATED WITH GEOGRID DESIGN. ADDITIONAL DETAILS TO BE PROVIDED BY WALL DESIGNER.

2 LARGE BLOCK RETAINING WALL
N.T.S.

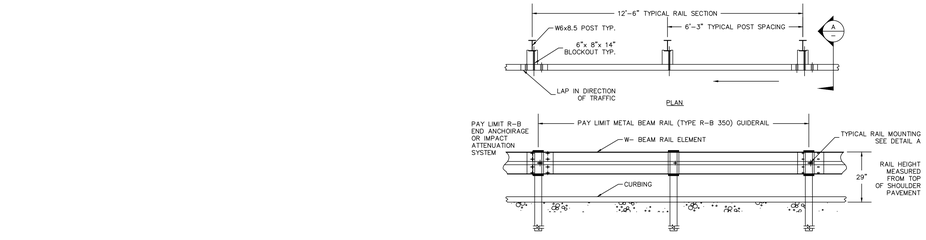


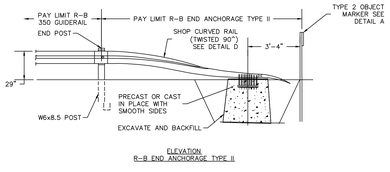
DETAIL A
TYPE 2 OBJECT MARKER
SIGN # 51-5030

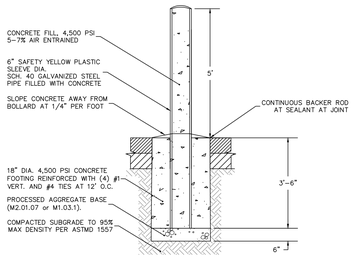
NOTES:
1. OBJECT MARKER FACE SHALL BE YELLOW TYPE III RETROREFLECTORIZED THE BOTTOM OF TYPE 2 OBJECT MARKER SHALL BE 4' ABOVE GROUND LEVEL MOUNTED ON METAL DELINEATOR POST. IT SHALL BE USED TO IDENTIFY CULVERT ENDS AND TYPE II END ANCHORS, OR AS DIRECTED BY THE ENGINEER.



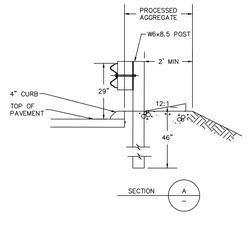
DETAIL C
W-BEAM TERMINAL ELEMENT



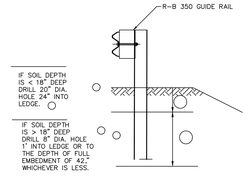




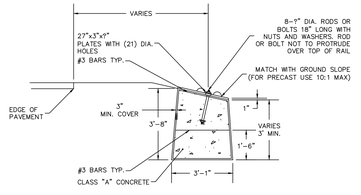
3 BOLLARD
N.T.S.



CURB APPLICATION



ELEVATION



DETAIL A
ELEVATION
ROADSIDE CONCRETE END ANCHOR

4 GUARD RAIL
N.T.S.

DECISION DATE: _____

ENDORSEMENT DATE: _____

MEDWAY PLANNING & ECONOMIC DEVELOPMENT BOARD

DORE + WHITTIER
MASSACHUSETTS
260 MERRIMAC STREET BUILDING 7, 2ND FLOOR
NEWBURYPORT, MA. 01950
P: (978) 499-2999
VERMONT
212 BATTERY STREET
BURLINGTON, VT 05401
P: (802) 863-1428

LANGAN
Langan Engineering and Environmental Services, LLC.
100 Cambridge Street, Suite 1310
Boston, MA 02114
T: 617.824.9100 F: 617.824.9101 www.langan.com

MEDWAY MUNICIPAL COMPLEX
120 MAIN STREET,
MEDWAY, MA 02053

PROJECT NUMBER: 151072201

SEAL AND SIGNATURE:

COMMONWEALTH OF MASSACHUSETTS JOHN D. PLAISTED No. 36918 REGISTERED PROFESSIONAL ENGINEER

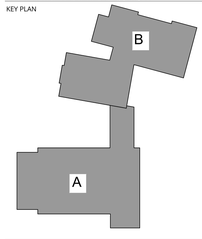
REVISIONS:

NO.	DATE	TITLE
1	09/18/2026	PEER REVIEW COMMENT RESPONSE

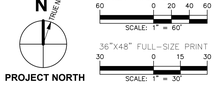
ISSUE TITLE AND DATE:
PERMIT DRAWINGS
7/20/2026

COPYRIGHT © 2023 by Dore & Whittier Architects, Inc. (D+W). These documents are D+W's instruments of service and as such, D+W retains all copyrights, common law, and statutory rights. Use of these documents without D+W's express written permission will result in copyright infringement.

KEY PLAN



ORIENTATION AND SCALE:

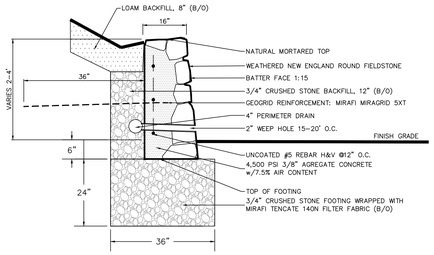


SHEET TITLE:

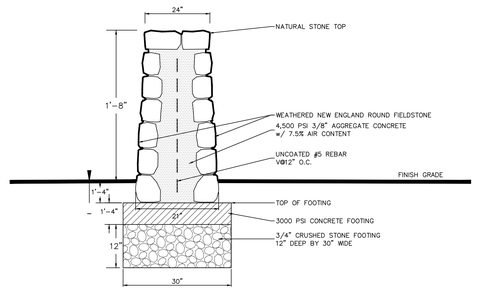
SITE DETAILS III

SHEET NUMBER:

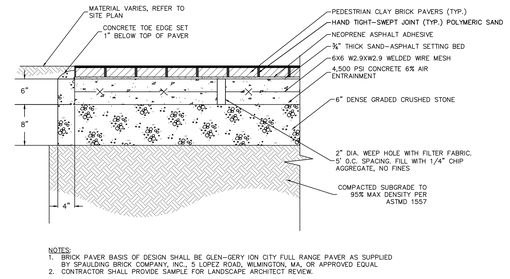
CS503



1 STONE RETAINING WALL
N.T.S.

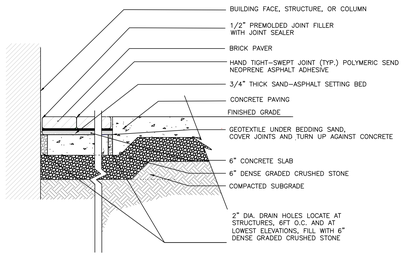


2 FREESTANDING STONE WALL
N.T.S.

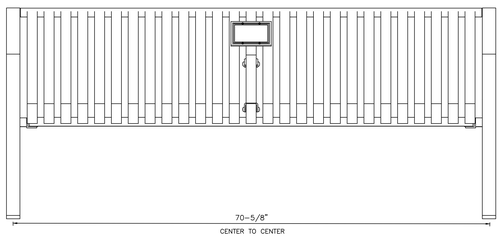


NOTES:
1. BRICK PAVER BASIS OF DESIGN SHALL BE GLEN-GERY ION CITY FULL RANGE PAVER AS SUPPLIED BY SPAULDING BRICK COMPANY, INC., 5 LOPEZ ROAD, WILMINGTON, MA, OR APPROVED EQUAL
2. CONTRACTOR SHALL PROVIDE SAMPLE FOR LANDSCAPE ARCHITECT REVIEW.

3 BRICK PAVER
N.T.S.

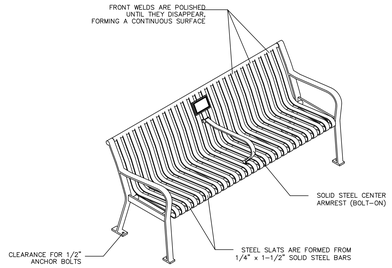


4 BRICK PAVER BAND
N.T.S.

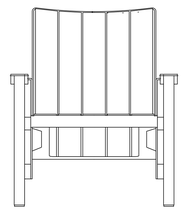


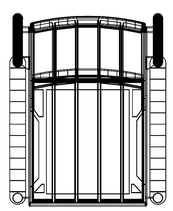
NOTES:
1. BENCH BASIS OF DESIGN SHALL BE MODEL RB-28 ROM THE STEELSTES RB COLLECTION, AS MANUFACTURED BY VICTOR STANLEY, INC. P.O. DRAWER 330, DUNKIRK, MD 20754, OR APPROVED EQUAL
2. BENCH TO BE SURFACE MOUNTED
3. LENGTH SHALL BE 6-FT
4. COLOR SHALL BE BLACK
5. CONTRACTOR SHALL PROVIDE SHOP DRAWINGS FOR LANDSCAPE ARCHITECT REVIEW PRIOR TO FABRICATION

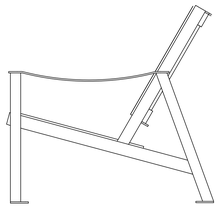




5 BENCH
N.T.S.

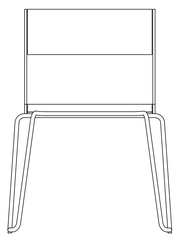


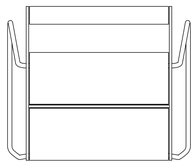


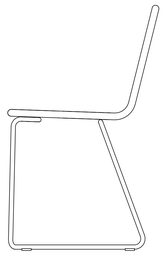


NOTES:
1. LOUNGE CHAIR BASIS OF DESIGN SHALL BE FARI LOUNGE CHAIR 6914-931 AS MANUFACTURED BY VESTRE INC., 230 PARK AVENUE, 3RD FLOOR, NEW YORK, NY 10169, OR APPROVED EQUAL
2. PRIMARY MATERIAL TO BE HOT-DIP GALVANIZED AND POWDERED-COATED STEEL. SECONDARY MATERIAL TO BE KEBONY CLEAR WOOD
3. CONTRACTOR TO SUBMIT ALL FINISH AND COLOR SAMPLES FOR REVIEW. FINAL COLOR TO BE SELECTED BY LANDSCAPE ARCHITECT
4. CONTRACTOR SHALL PROVIDE SHOP DRAWINGS FOR LANDSCAPE ARCHITECT REVIEW PRIOR TO FABRICATION

6 LOUNGE CHAIR
N.T.S.

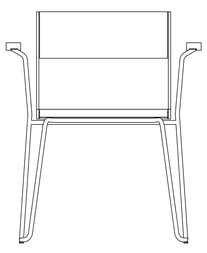


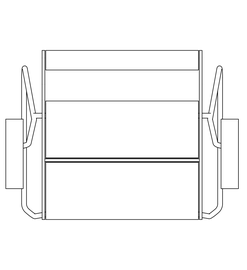


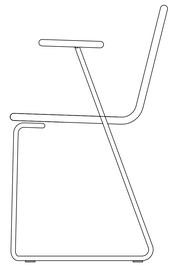


NOTES:
1. CAFE CHAIR BASIS OF DESIGN SHALL BE APRIL GO CHAR 7013-901 AS MANUFACTURED BY VESTRE INC., 230 PARK AVENUE, 3RD FLOOR, NEW YORK, NY 10169, OR APPROVED EQUAL
2. PRIMARY MATERIAL TO BE HOT-DIP GALVANIZED AND POWER-COATED STEEL. SECONDARY MATERIAL TO BE KEBONY CLEAR WOOD
3. COLOR SHALL BE GENTIAN BLUE
4. CONTRACTOR TO SUBMIT ALL FINISH AND COLOR SAMPLES FOR REVIEW. FINAL COLOR TO BE SELECTED BY LANDSCAPE ARCHITECT
5. CONTRACTOR SHALL PROVIDE SHOP DRAWINGS FOR LANDSCAPE ARCHITECT REVIEW PRIOR TO FABRICATION

7 CAFE CHAIR
N.T.S.







NOTES:
1. CAFE CHAIR WITH ARMS BASIS OF DESIGN SHALL BE APRIL GO CHAIR 7014-901 AS MANUFACTURED BY VESTRE INC., 230 PARK AVENUE, 3RD FLOOR, NEW YORK, NY 10169, OR APPROVED EQUAL
2. PRIMARY MATERIAL TO BE HOT-DIP-GALVANIZED AND POWERED-COATED STEEL. SECONDARY MATERIAL TO BE KEBONY CLEAR WOOD
3. CONTRACTOR TO SUBMIT ALL FINISH AND COLOR SAMPLES FOR REVIEW. FINAL COLOR TO BE SELECTED BY LANDSCAPE ARCHITECT.

8 CAFE CHAIR WITH ARMS
N.T.S.

DECISION DATE: _____

ENDORSEMENT DATE: _____

_____

_____

_____

_____

_____

MEDWAY PLANNING & ECONOMIC DEVELOPMENT BOARD

DORE + WHITTIER
MASSACHUSETTS
260 MERRIMAC STREET BUILDING 7, 2ND FLOOR
NEWBURYPORT, MA 01950
P: (978) 499-2999

VERMONT
212 BATTERY STREET
BURLINGTON, VT 05401
P: (802) 863-1428

LANGAN
Langan Engineering and
Environmental Services, LLC.
100 Cambridge Street, Suite 1310
Boston, MA 02114
T: 617.824.9100 F: 617.824.9101 www.langan.com

MEDWAY MUNICIPAL COMPLEX
120 MAIN STREET,
MEDWAY, MA 02053

PROJECT NUMBER: 151072201

SEAL AND SIGNATURE:

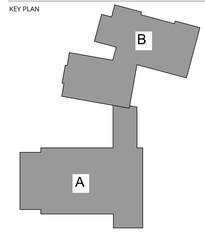
REVISIONS:

NO.	DATE	TITLE
1	09/18/2026	PEER REVIEW COMMENT RESPONSE

ISSUE TITLE AND DATE:
PERMIT DRAWINGS
7/20/2026

COPYRIGHT © 2023 by Dore & Whittier Architects, Inc. (D+W). These documents are D+W's instruments of service and as such, D+W retains all copyrights, common law, and statutory rights. Use of these documents without D+W's express written permission will result in copyright infringement.

KEY PLAN



ORIENTATION AND SCALE:



18"X24" HALF-SIZE PRINT
60 0 20 40 60
SCALE: 1" = 60'

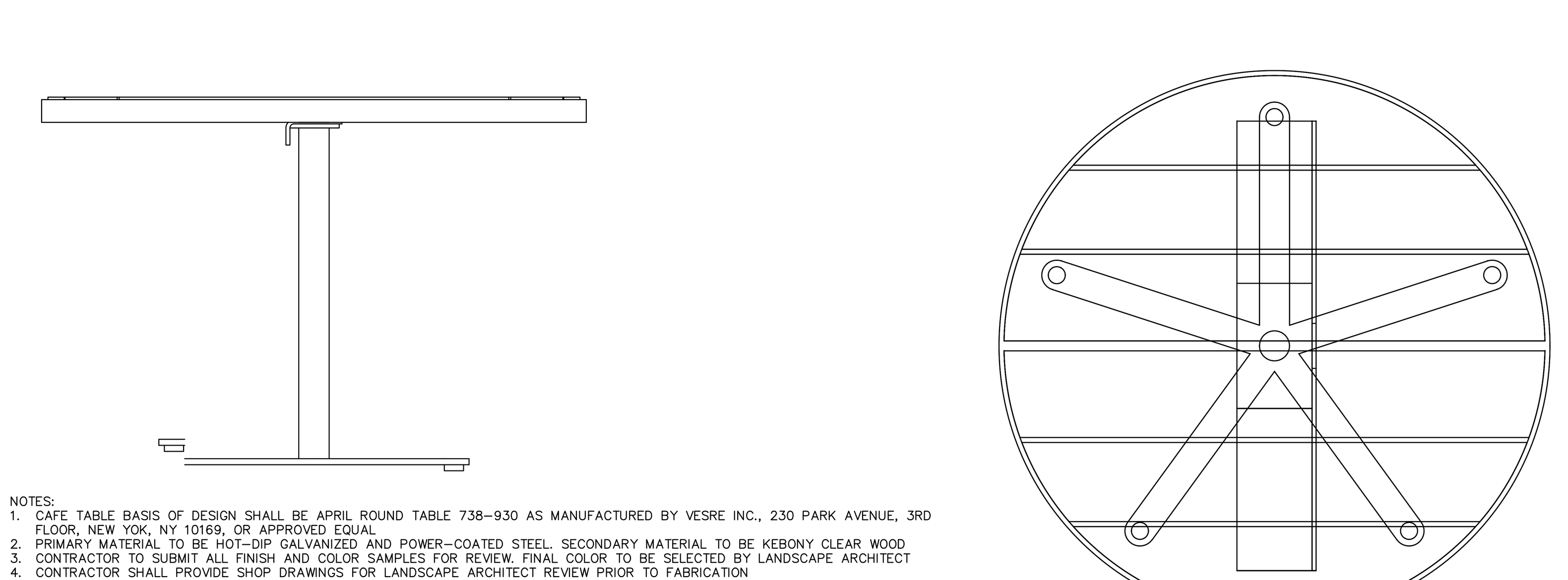
36"X48" FULL-SIZE PRINT
30 0 15 30
SCALE: 1" = 30'

SHEET TITLE:

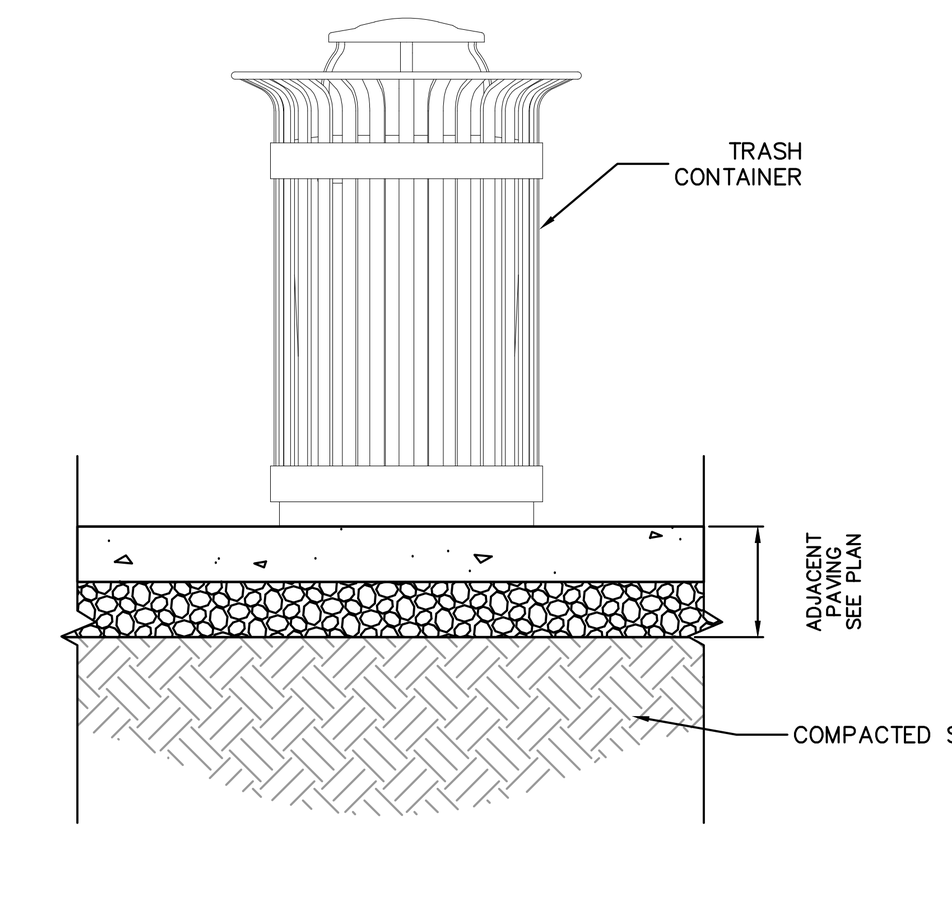
SITE FEATURE DETAILS

SHEET NUMBER:

CS504

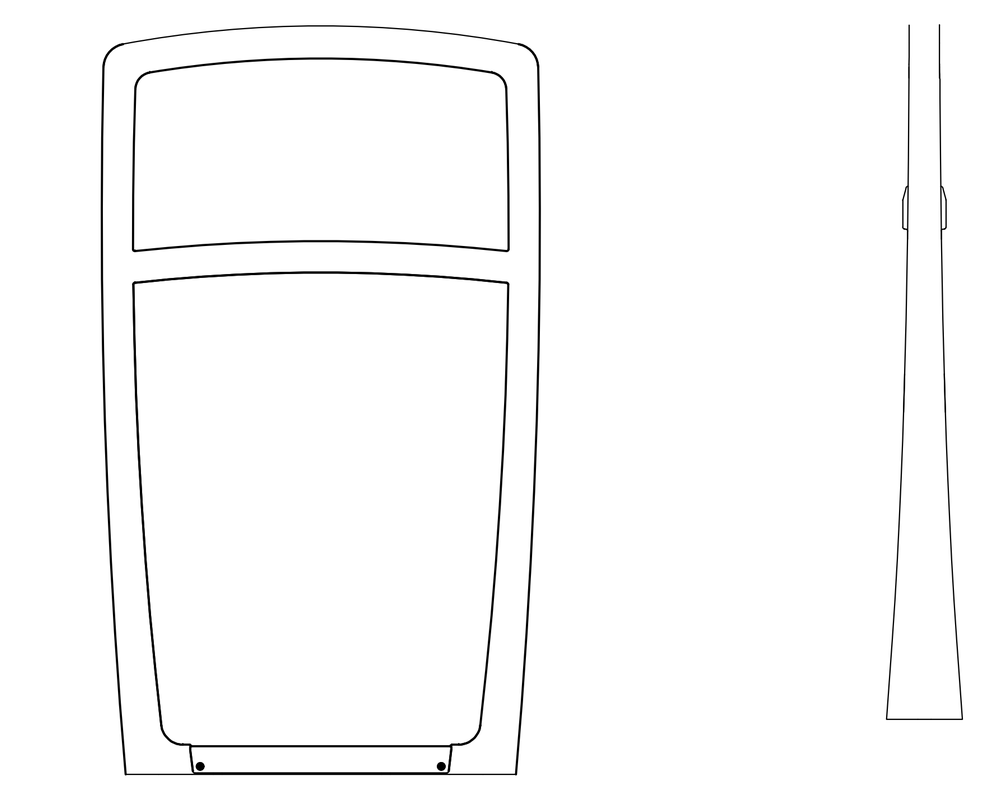


1 **CAFE TABLE**
N.T.S.



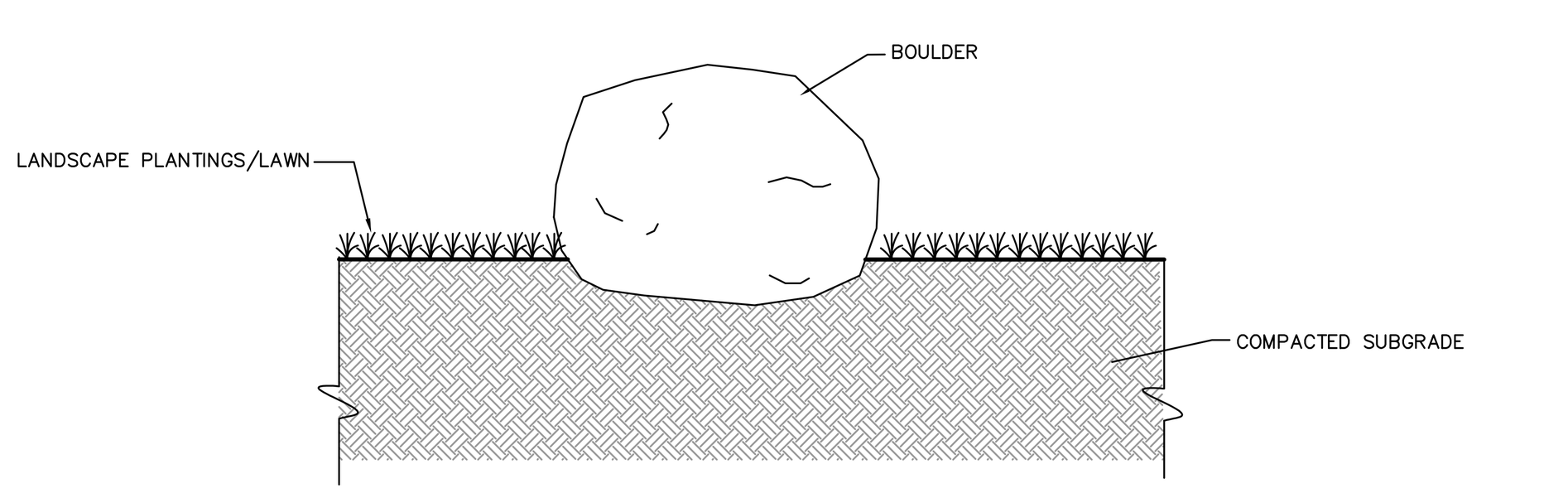
NOTES:
1. LITTER/RECYCLING RECEPTACLE BASIS OF DESIGN SHALL BE '200 SERIES TRASH RECEPTACLE: HEAVY DUTY STEEL FLAT BAR FRAME, DOME LID, 1X32 GALLON POLYETHYLENE LINER BY MAGLIN SITE FURNITURE, MODEL MBR–0200–00011
2. FINISH SHALL BE BLACK POWDERCOAT OR APPROVED EQUAL.
3. CONTRACTOR SHALL PROVIDE SHOP DRAWINGS FOR LANDSCAPE ARCHITECT REVIEW PRIOR TO FABRICATION.

2 **LITTER/RECYCLING RECEPTACLE**
N.T.S.



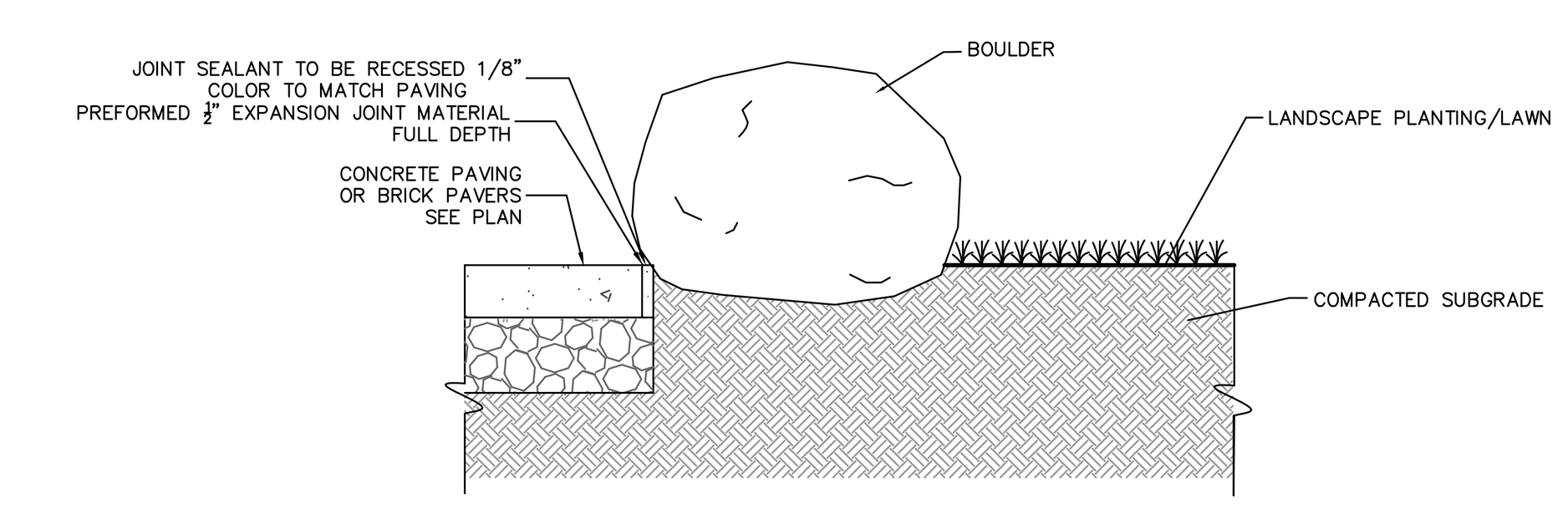
NOTES:
1. BIKE RACK BASIS OF DESIGN SHALL BE CORDIA BIKE RACK, SKOR, AS MANUFACTURED BY FORMS + SURFACES, 1901 WILLIAM FLYNN HIGHWAY, GLENSHAW, PA 15116, OR APPROVED EQUAL
2. BODY AND COVER PLATE FINISH TO BE POWER COAT, BLACK
3. BIKE RACK TO BE SURFACE MOUNTED
4. CONTRACTOR TO SUBMIT ALL FINISH AND COLOR SAMPLES FOR REVIEW. FINAL COLOR TO BE SELECTED BY LANDSCAPE ARCHITECT
5. CONTRACTOR SHALL PROVIDE SHOP DRAWINGS FOR LANDSCAPE ARCHITECT REVIEW PRIOR TO FABRICATION

3 **BIKE RACK**
N.T.S.



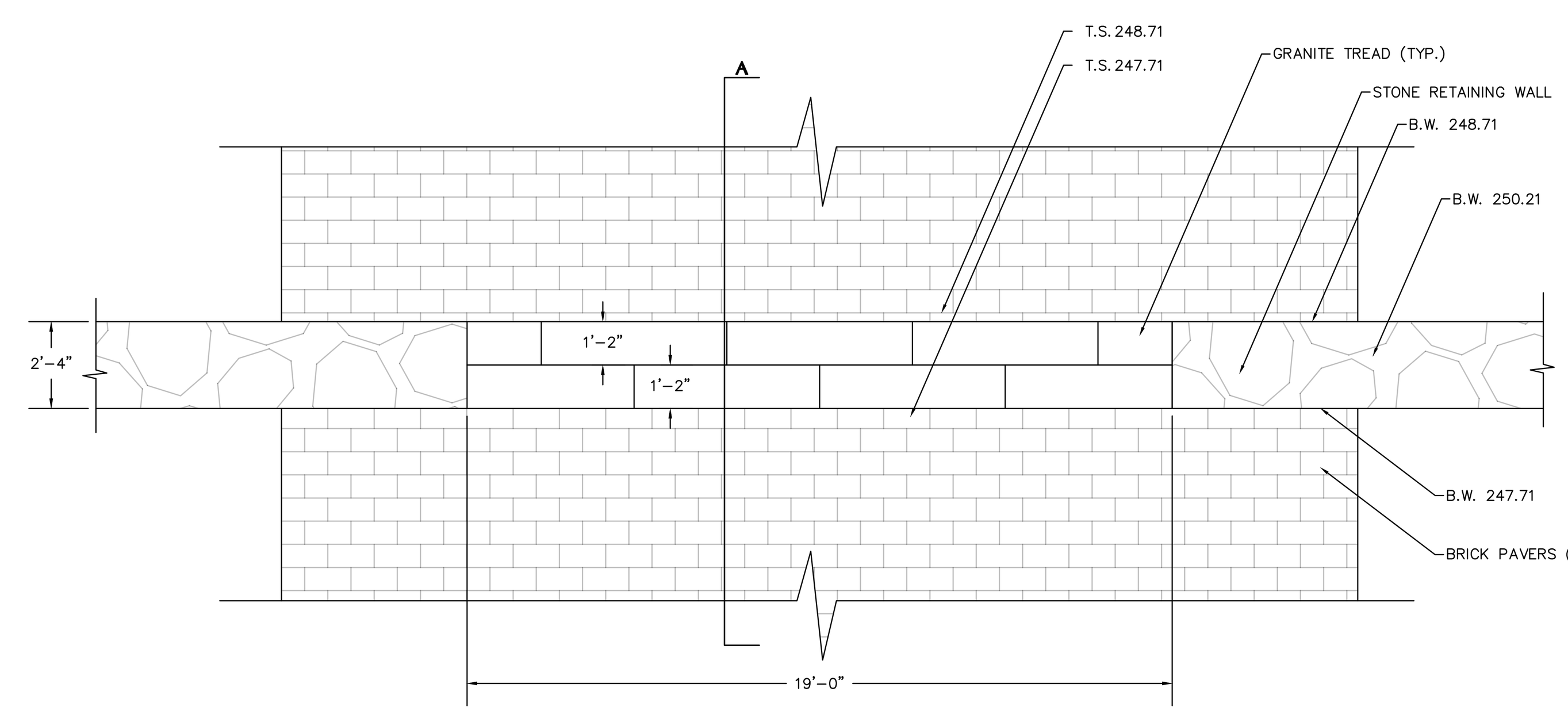
NOTES:
1. BOULDERS ARE TO BE SELECTED FROM EXISTING STONE WALLS TO BE DEMOLISHED AND OTHER EXISTING BOULDERS ON SITE TO GREATEST EXTENT PRACTICABLE. ALL SELECTED BOULDERS ARE TO MEET SIZE PARAMETERS LISTED BELOW; ADDITIONAL BOULDERS SHOULD BE SUPPLEMENTED FROM OUTSIDE SOURCE ONLY AS NECESSARY. PRIOR TO INSTALLATION, CONTRACTOR TO CLEAN BOULDERS.
2. BOULDERS TO BE LOCATED IN THE FIELD BY PROJECT LANDSCAPE ARCHITECT.
3. EMBED MINIMUM 1/3 OF BOULDER INTO GROUND ON COMPACTED SUBGRADE.
4. CONTRACTOR TO SUBMIT PRODUCT DATA, PHOTO DOCUMENTATION, AND QUARRY SOURCE (IF APPLICABLE) FOR REVIEW PRIOR TO INSTALLATION.
5. CONTRACTOR TO PROVIDE FULL MOCK–UP OF BOULDER INSTALLATION. MOCK–UP SHOULD DEMONSTRATE HOW BOULDERS INTERACT WITH ADJACENT HARDSCAPE (CURBS, CONCRETE SIDEWALKS, AND PAVERS).
6. BOULDER SIZING PARAMETERS:
   SMALL BOULDER: 36" LONG AND WIDE – 48" LONG AND WIDE
   LARGE BOULDER: MINIMUM 48" LONG AND WIDE

4 **BOULDER IN LANDSCAPE AREA**
N.T.S

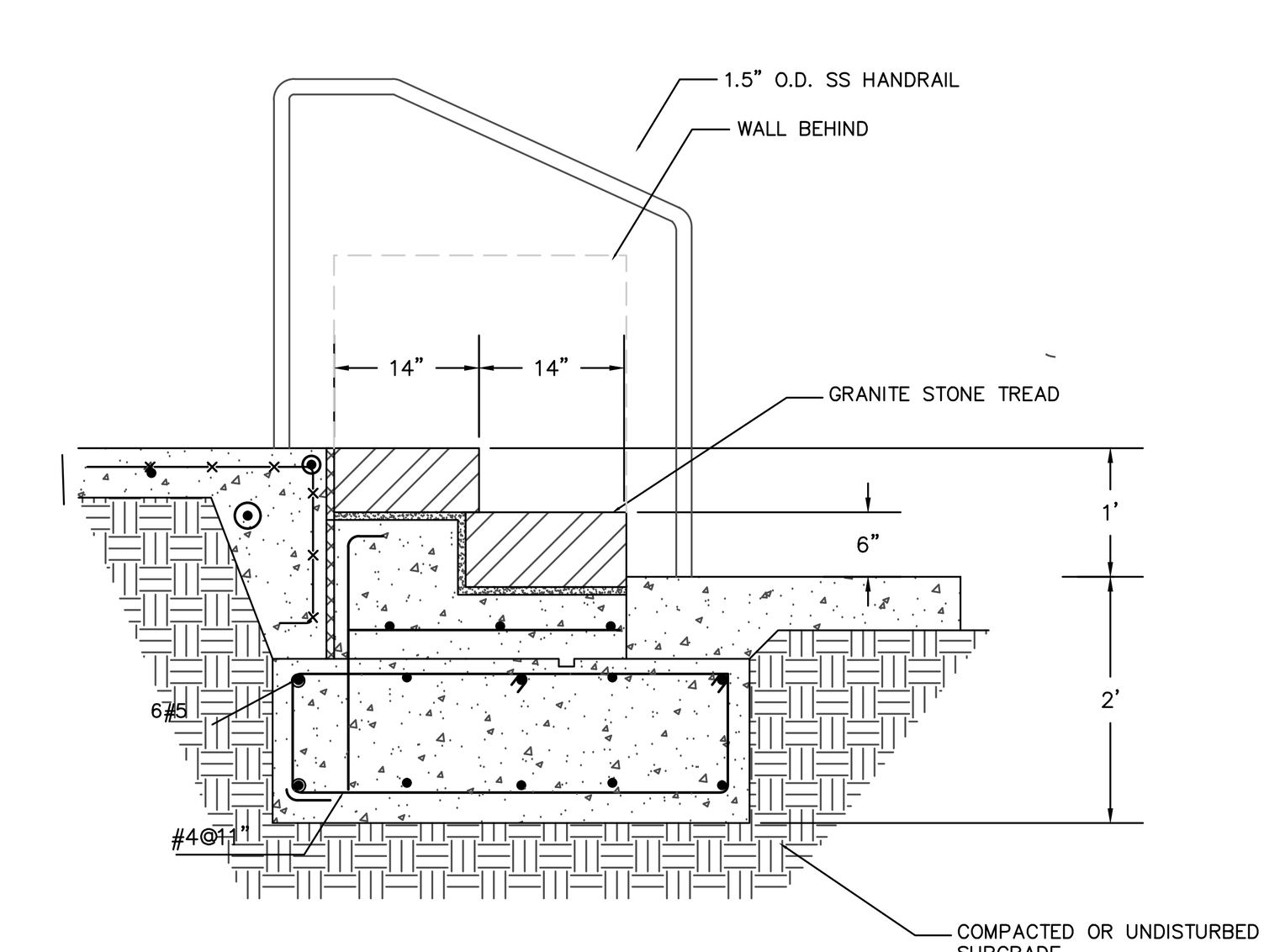


NOTES:
1. BOULDERS ARE TO BE SELECTED FROM EXISTING STONE WALLS TO BE DEMOLISHED AND OTHER EXISTING BOULDERS ON SITE TO GREATEST EXTENT PRACTICABLE. ALL SELECTED BOULDERS ARE TO MEET SIZE PARAMETERS LISTED BELOW; ADDITIONAL BOULDERS SHOULD BE SUPPLEMENTED FROM OUTSIDE SOURCE ONLY AS NECESSARY. PRIOR TO INSTALLATION, CONTRACTOR TO CLEAN BOULDERS.
2. BOULDERS TO BE LOCATED IN THE FIELD BY PROJECT LANDSCAPE ARCHITECT.
3. EMBED MINIMUM 1/3 OF BOULDER INTO GROUND ON COMPACTED SUBGRADE.
4. CONTRACTOR TO SUBMIT PRODUCT DATA, PHOTO DOCUMENTATION, AND QUARRY SOURCE (IF APPLICABLE) FOR REVIEW PRIOR TO INSTALLATION.
5. CONTRACTOR TO PROVIDE FULL MOCK–UP OF BOULDER INSTALLATION. MOCK–UP SHOULD DEMONSTRATE HOW BOULDERS INTERACT WITH ADJACENT HARDSCAPE (CURBS, CONCRETE SIDEWALKS, AND PAVERS).
6. BOULDER SIZING PARAMETERS:
   SMALL BOULDER: 36" LONG AND WIDE – 48" LONG AND WIDE
   LARGE BOULDER: MINIMUM 48" LONG AND WIDE

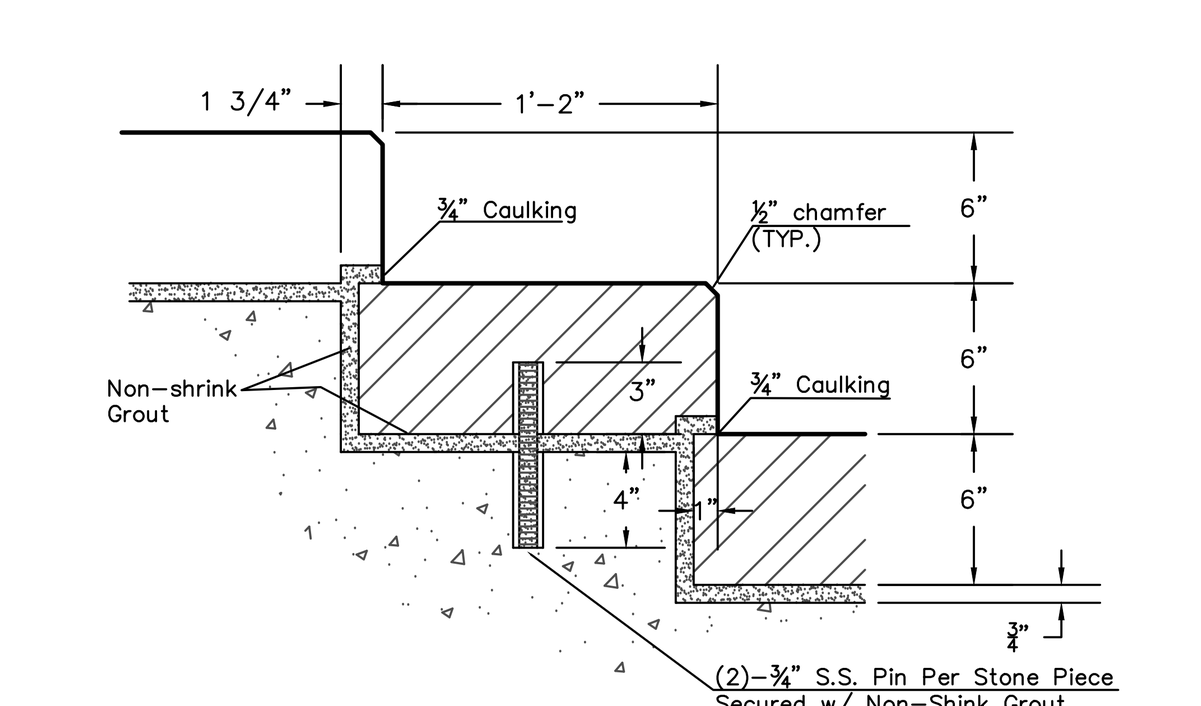
5 **BOULDER BETWEEN LANDSCAPE AND PAVING**
N.T.S



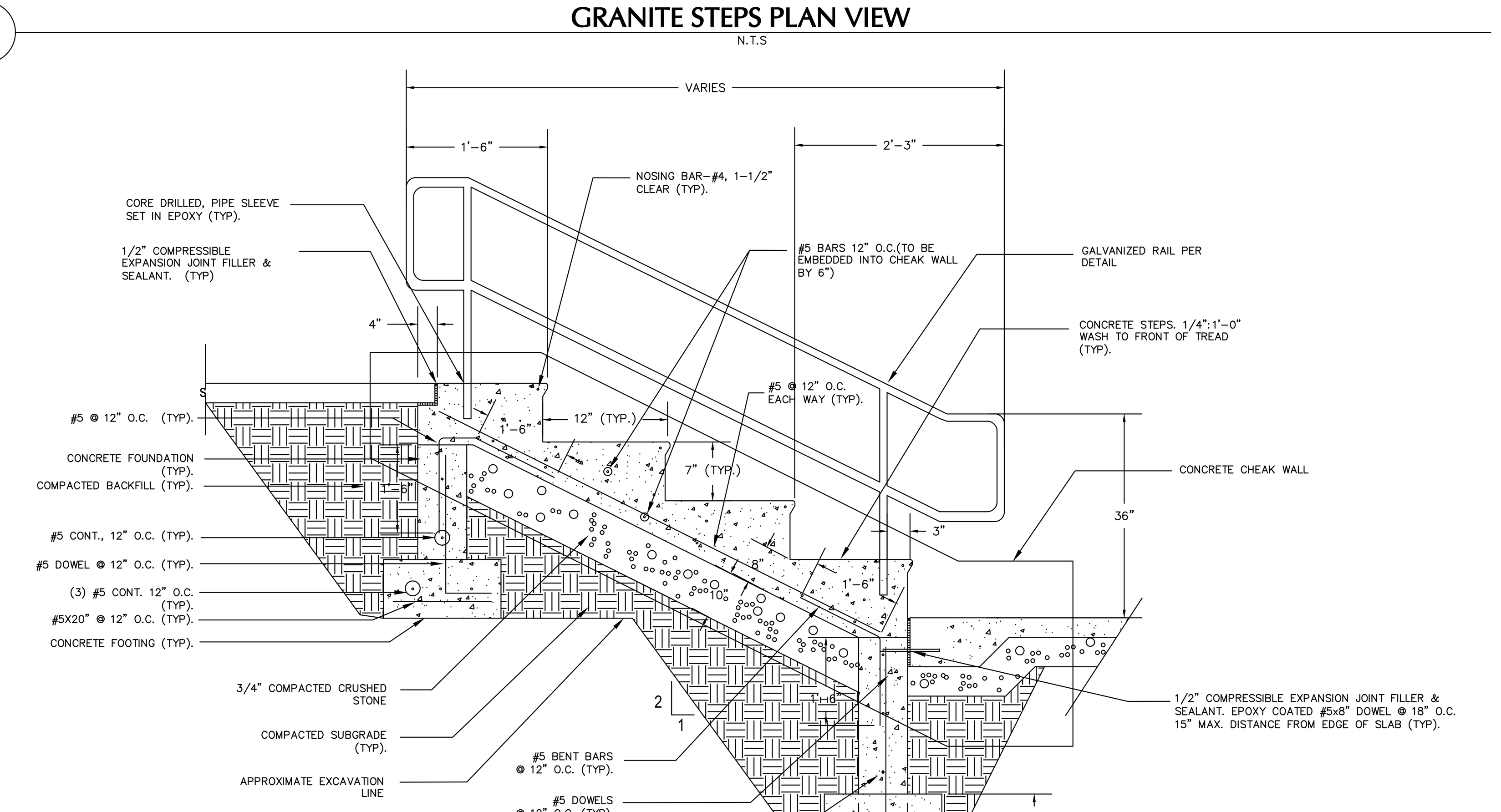
6 **GRANITE STEPS PLAN VIEW**
N.T.S



7 **GRANITE STEPS SECTION A**
N.T.S



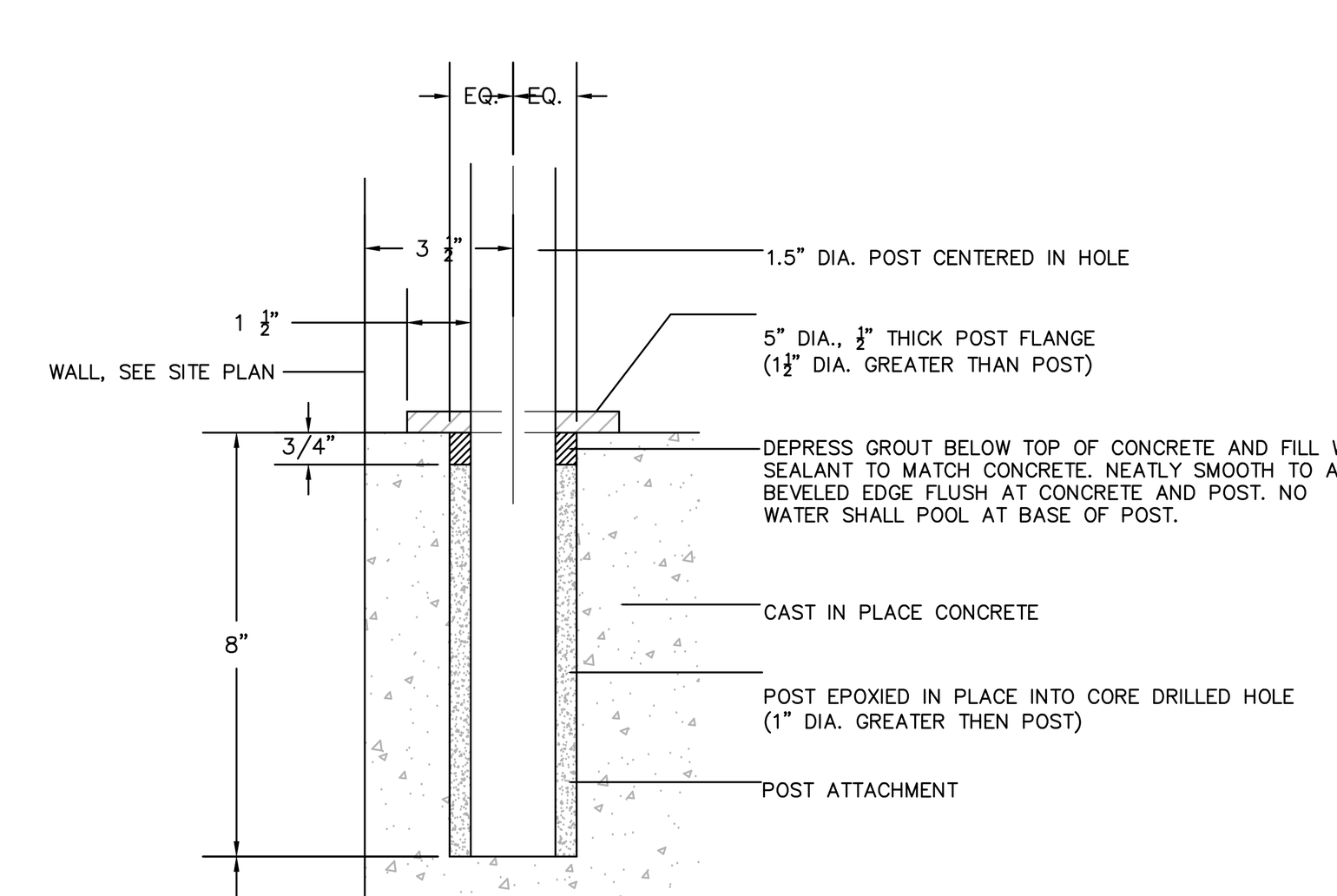
8 **STONE TREAD CONNECTION**
N.T.S



NOTES:

1. ALL CONSTRUCTION SHALL CONFORM TO MASSACHUSETTS STATE BUILDING CODE, LATEST EDITION.
2. SHOP DRAWINGS FOR HAND RAIL SHALL BE SUBMITTED TO ENGINEER FOR FINAL APPROVAL.
3. SHOWN TYPICAL – NUMBER OF RISERS WILL VARY PER PLAN

9 **TYPICAL CONCRETE STAIRS**
N.T.S.



NOTE:
1. CONTRACTOR TO SUBMIT SHOP DRAWINGS. REVIEW BY PROJECT LANDSCAPE ARCHITECT PRIOR TO INSTALLATION.
2. USE STAINLESS STEEL FOR RAILINGS.

10 **HANDRAIL CONNECTION**
N.T.S

DECISION DATE: ______

ENDORSEMENT DATE: ______

MEDWAY PLANNING & ECONOMIC DEVELOPMENT BOARD

DORE + WHITTIER
MASSACHUSETTS
260 MERRIMAC STREET BUILDING 7, 2ND FLOOR
NEWBURYPORT, MA 01950
P: (978) 499-2999

VERMONT
212 BATTERY STREET
BURLINGTON, VT 05401
P: (802) 863-1428

LANGAN
Langan Engineering and Environmental Services, LLC.
100 Cambridge Street, Suite 1310
Boston, MA 02114
T: 617.824.9100 F: 617.824.9101 www.langan.com

MEDWAY MUNICIPAL COMPLEX
120 MAIN STREET,
MEDWAY, MA 02053

PROJECT NUMBER: 151072201

SEAL AND SIGNATURE:

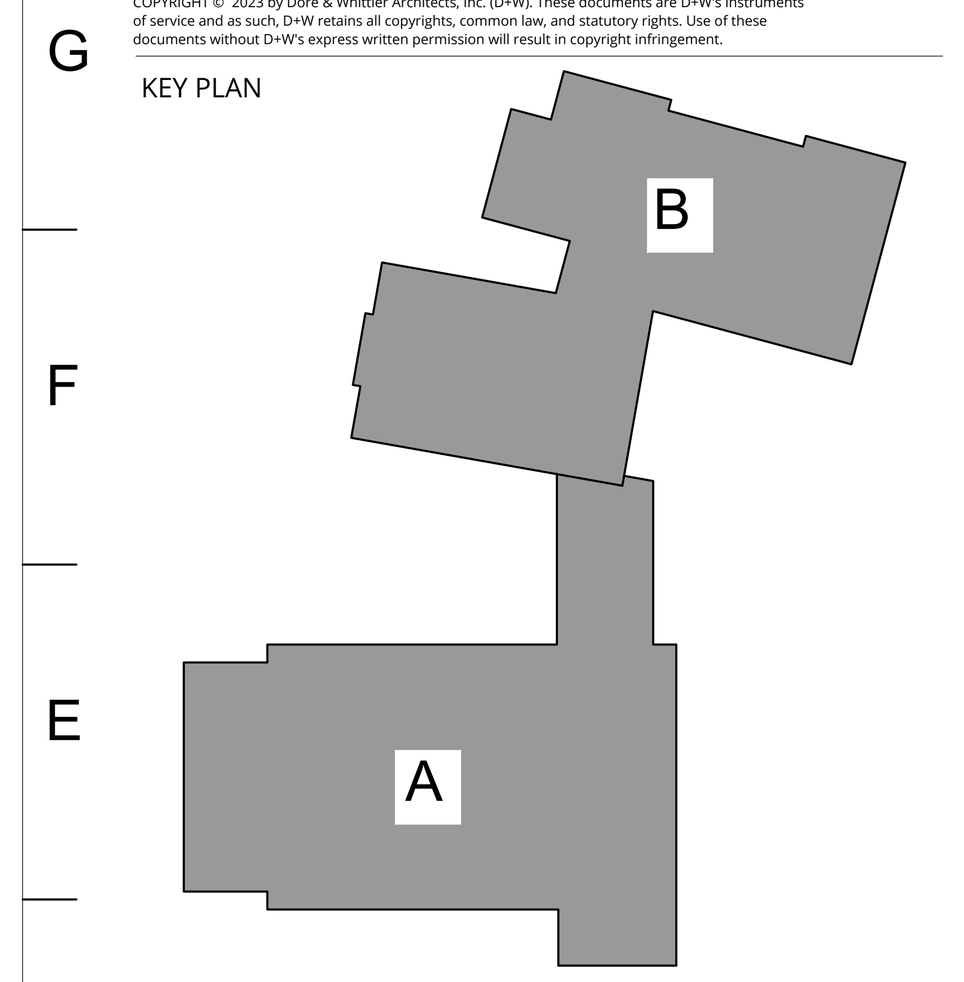
REVISIONS:

NO.	DATE	TITLE
1	09/18/2026	PEER REVIEW COMMENT RESPONSE

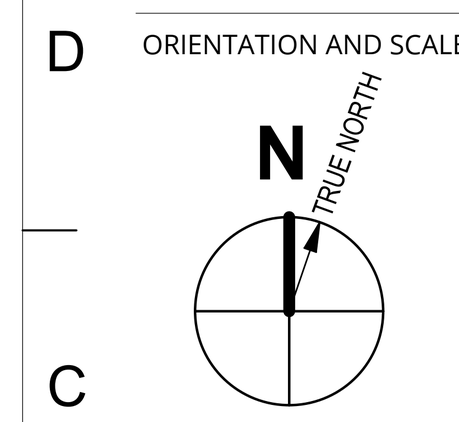
ISSUE TITLE AND DATE:
PERMIT DRAWINGS
7/20/2026

COPYRIGHT © 2023 by Dore & Whittier Architects, Inc. (D+W). These documents are D+W's instruments of service and as such, D+W retains all copyrights, common law, and statutory rights. Use of these documents without D+W's express written permission will result in copyright infringement.

KEY PLAN



ORIENTATION AND SCALE:



18"x24" HALF-SIZE PRINT
SCALE: 1" = 60'
36"x48" FULL-SIZE PRINT
SCALE: 1" = 30'

SHEET TITLE:
SITE FEATURE DETAILS II

SHEET NUMBER:
CS505



DECISION DATE: ____________________

ENDORSEMENT DATE: ____________________

MEDWAY PLANNING & ECONOMIC DEVELOPMENT BOARD

DORE + WHITTIER

MASSACHUSETTS
260 MERRIMAC STREET BUILDING 7, 2ND FLOOR
NEWBURYPORT, MA 01950
P: (978) 499-2999

VERMONT
212 BATTERY STREET
BURLINGTON, VT 05401
P: (802) 863-1428

LANGAN

Langan Engineering and
Environmental Services, LLC.

100 Cambridge Street, Suite 1310
Boston, MA 02114

T: 617.824.9100 F: 617.824.9101 www.langan.com

MEDWAY MUNICIPAL COMPLEX

120 MAIN STREET,
MEDWAY, MA 02053

PROJECT NUMBER: 151072201

SEAL AND SIGNATURE:

COMMONWEALTH OF MASSACHUSETTS
JOHN D. PLANTE
CIVIL
No. 38118
REGISTERED
PROFESSIONAL ENGINEER

REVISIONS:

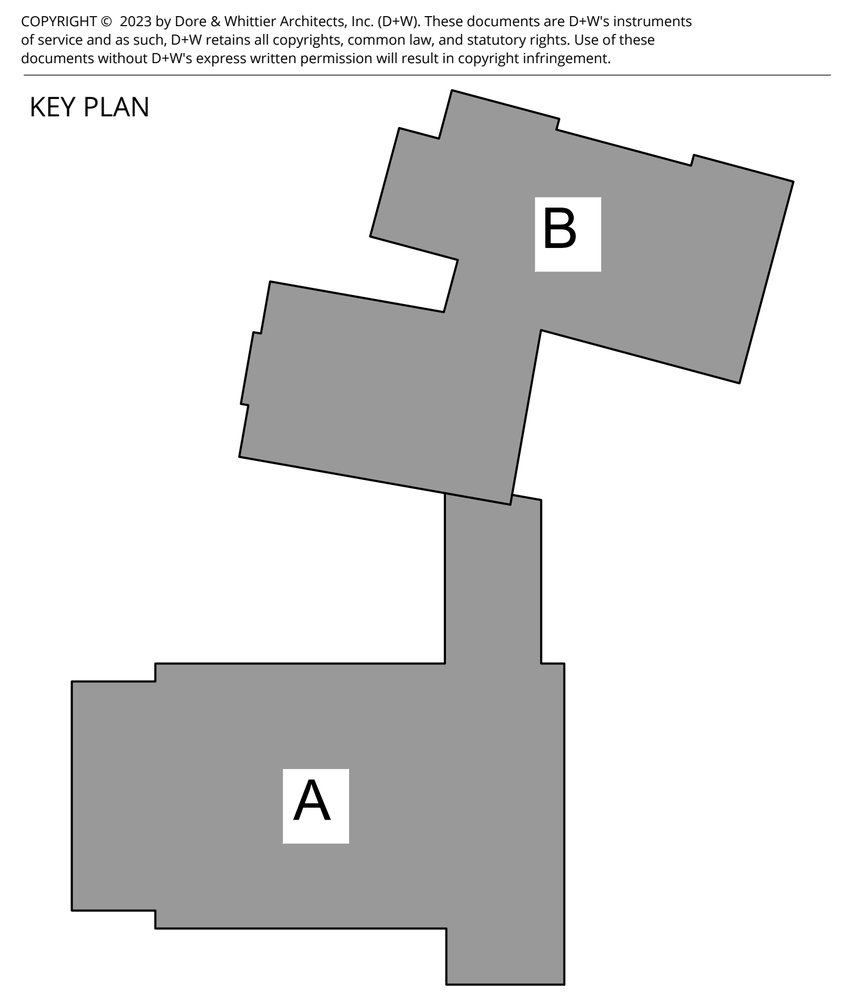
NO.	DATE	TITLE
1	09/18/2026	PEER REVIEW COMMENT RESPONSE

ISSUE TITLE AND DATE:

PERMIT DRAWINGS
7/20/2026

COPYRIGHT © 2023 by Dore & Whittier Architects, Inc. (D+W). These documents are D+W's instruments of service and as such, D+W retains all copyrights, common law, and statutory rights. Use of these documents without D+W's express written permission will result in copyright infringement.

KEY PLAN



ORIENTATION AND SCALE:

N
TRUE NORTH
PROJECT NORTH

18"X24" HALF-SIZE PRINT
SCALE: 1" = 60'

36"X48" FULL-SIZE PRINT
SCALE: 1" = 30'

SHEET TITLE:

GRADING PLAN

SHEET NUMBER:

CG101



DORE + WHITTIER

MASSACHUSETTS
260 MERRIMAC STREET BUILDING 7, 2ND FLOOR
NEWBURYPORT, MA 01950
P: (978) 499-2999

VERMONT
212 BATTERY STREET
BURLINGTON, VT 05401
P: (802) 863-1428

LANGAN

Langan Engineering and Environmental Services, LLC.
100 Cambridge Street, Suite 1310
Boston, MA 02114
T: 617.824.9100 F: 617.824.9101 www.langan.com

MEDWAY MUNICIPAL COMPLEX

120 MAIN STREET,
MEDWAY, MA 02053

PROJECT NUMBER: 151072201

SEAL AND SIGNATURE:

COMMONWEALTH OF MASSACHUSETTS — JOHN D. PLATTE — No. 39751 — REGISTERED PROFESSIONAL ENGINEER

REVISIONS:

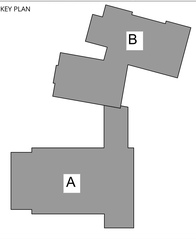
NO.	DATE	TITLE
1	09/18/2026	PEER REVIEW COMMENT RESPONSE

ISSUE TITLE AND DATE:

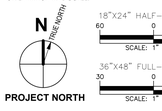
PERMIT DRAWINGS
7/20/2026

COPYRIGHT © 2023 by Dore & Whittier Architects, Inc. (D+W). These documents are D+W's instruments of service and shall remain the property of D+W whether the project for which they are prepared is executed or not. These documents without D+W's express written permission will result in copyright infringement.

KEY PLAN



ORIENTATION AND SCALE:



SHEET TITLE:

DRAINAGE PLAN

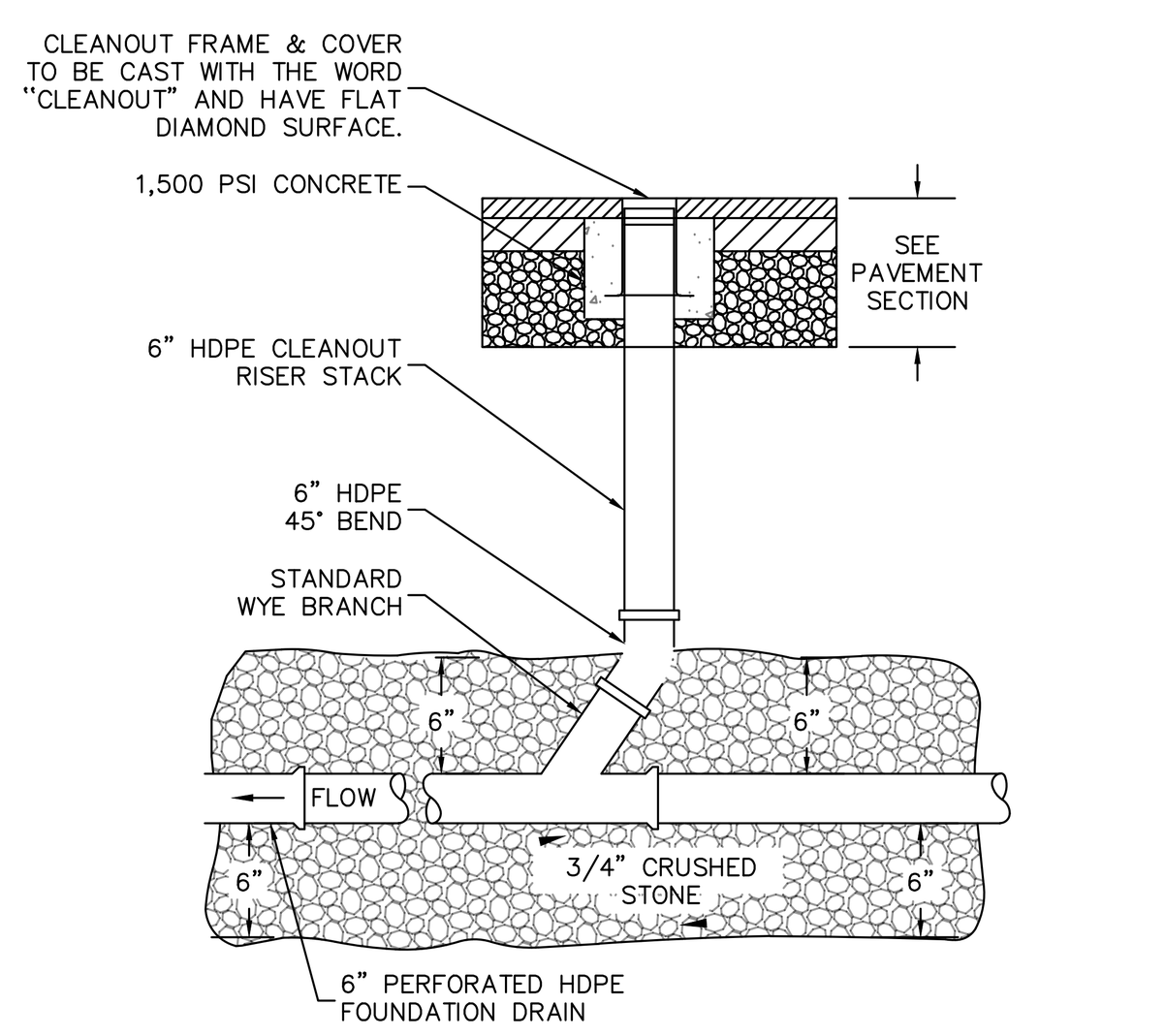
SHEET NUMBER:

CG201

DECISION DATE: _____

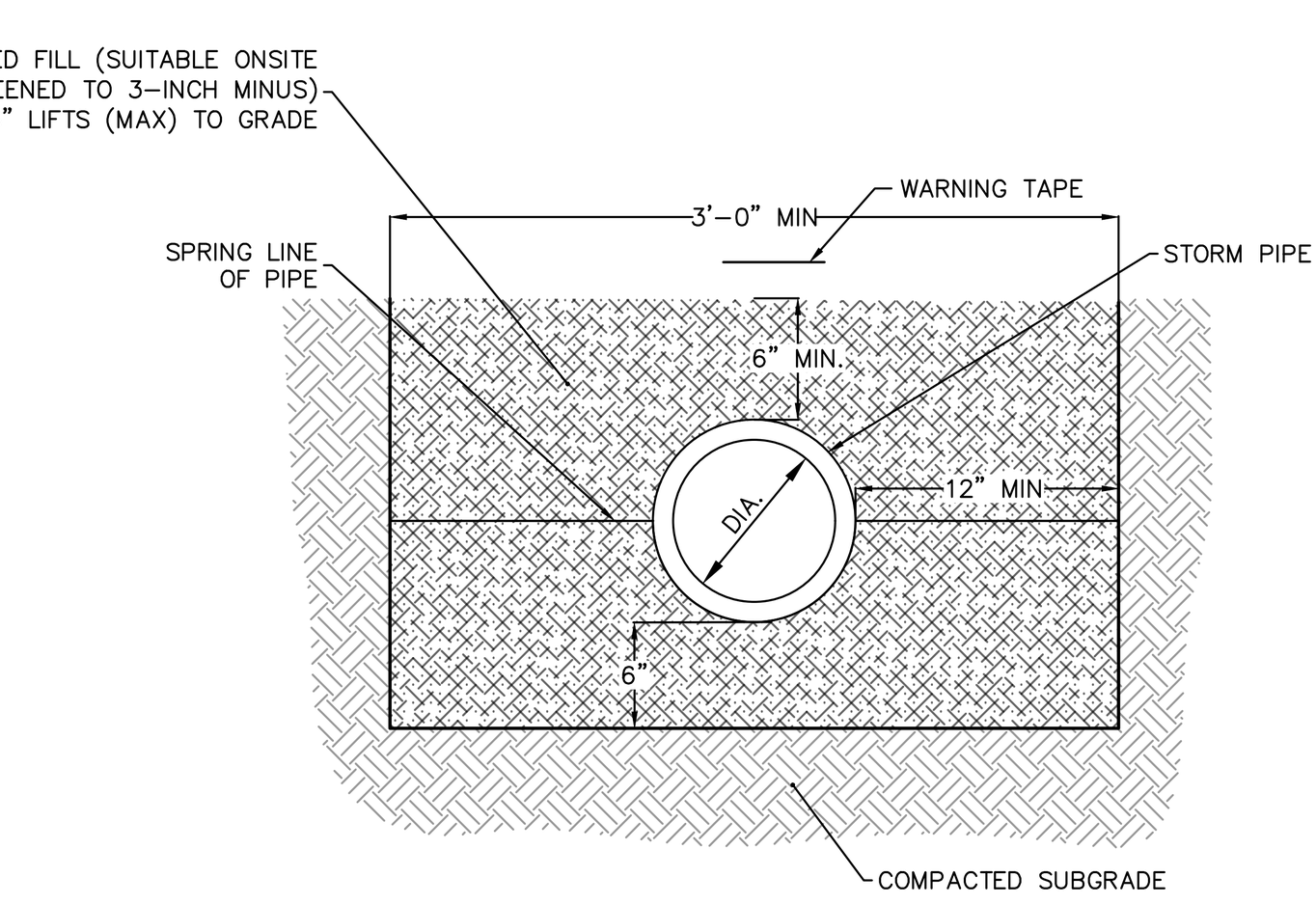
ENDORSEMENT DATE: _____

MEDWAY PLANNING & ECONOMIC DEVELOPMENT BOARD



1 FOUNDATION DRAIN CLEANOUT

N.T.S.

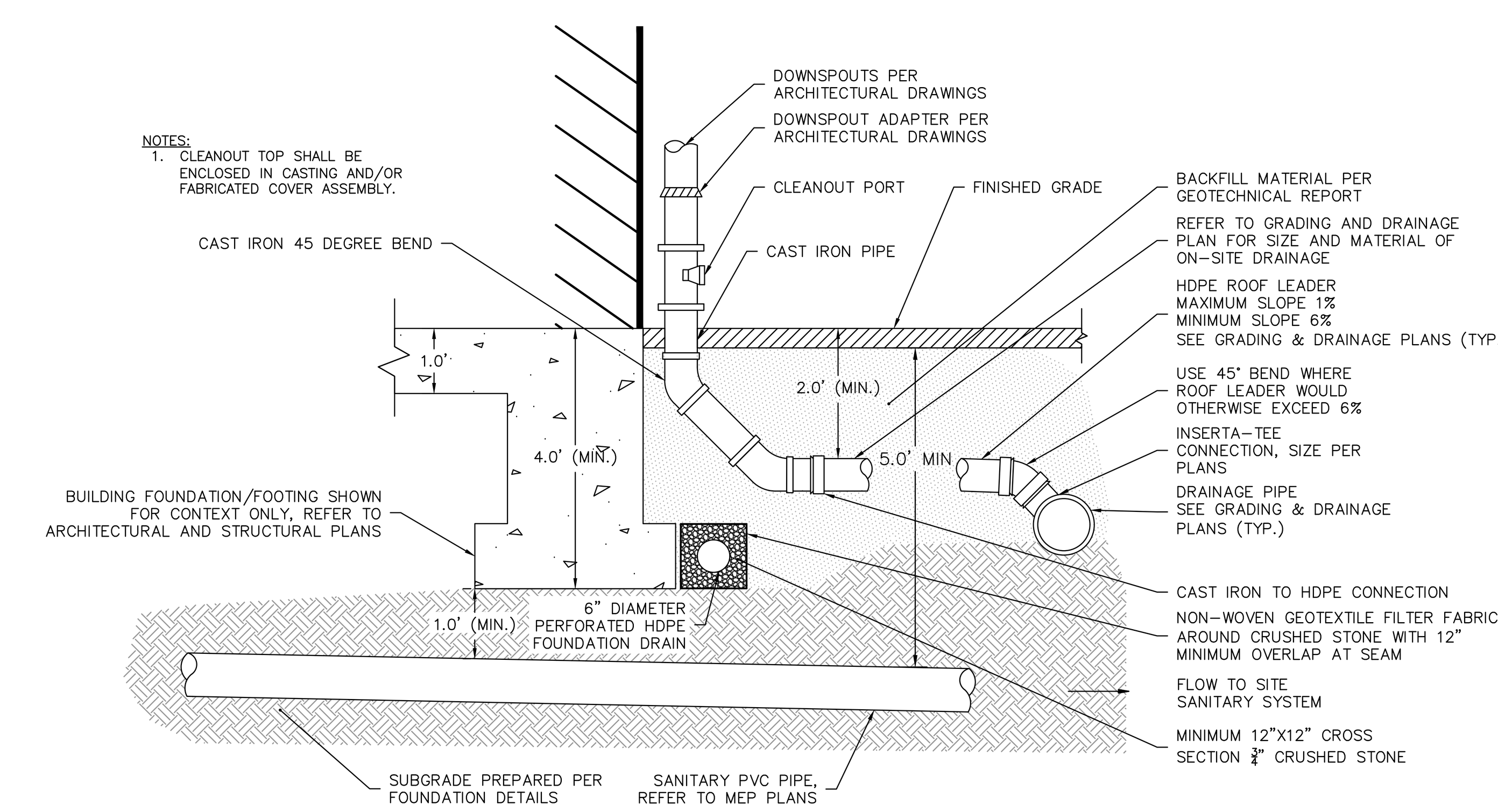


NOTES:
1. CONTRACTOR SHALL CONFIRM PIPE BEDDING AND BACKFILL WITH MANUFACTURER'S RECOMMENDATIONS

2 STORM PIPE BEDDING

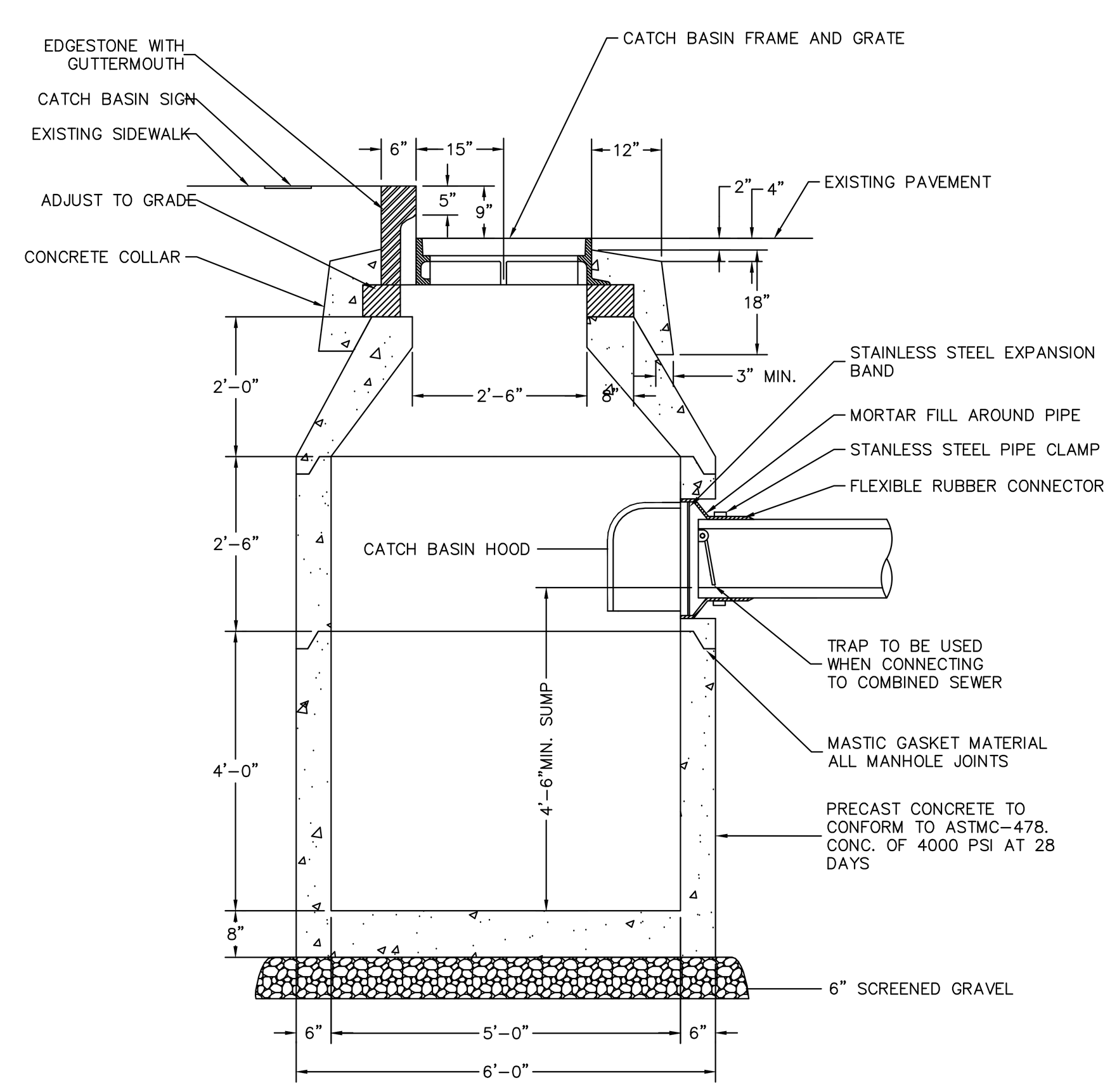
N.T.S.

NOTES:
1. CLEANOUT TOP SHALL BE ENCLOSED IN CASTING AND/OR FABRICATED COVER ASSEMBLY.

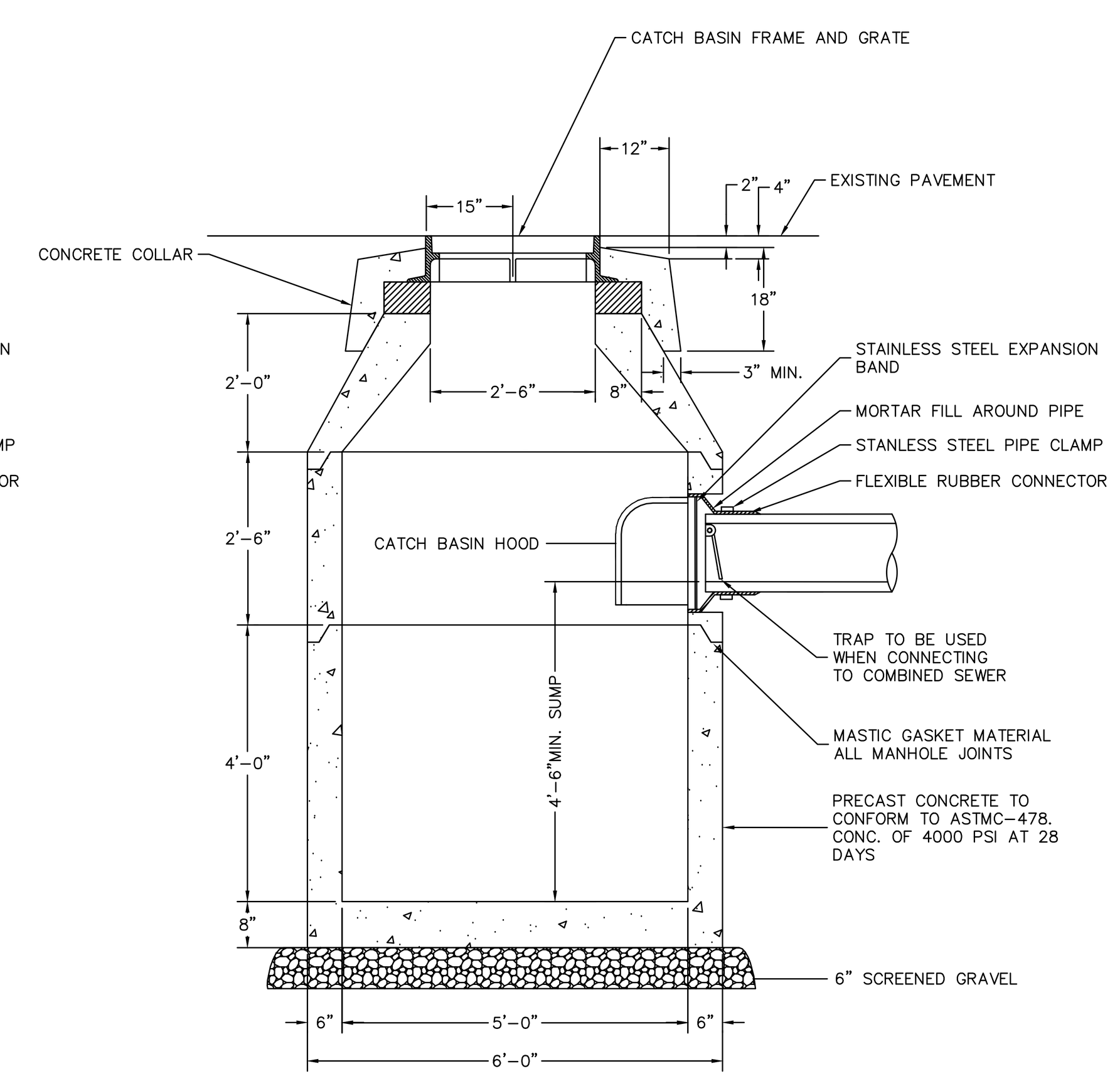


3 DOWNSPOUT CONNECTION AND FOUNDATION DRAIN

N.T.S.



CATCH BASIN WITH GUTTERMOUTH

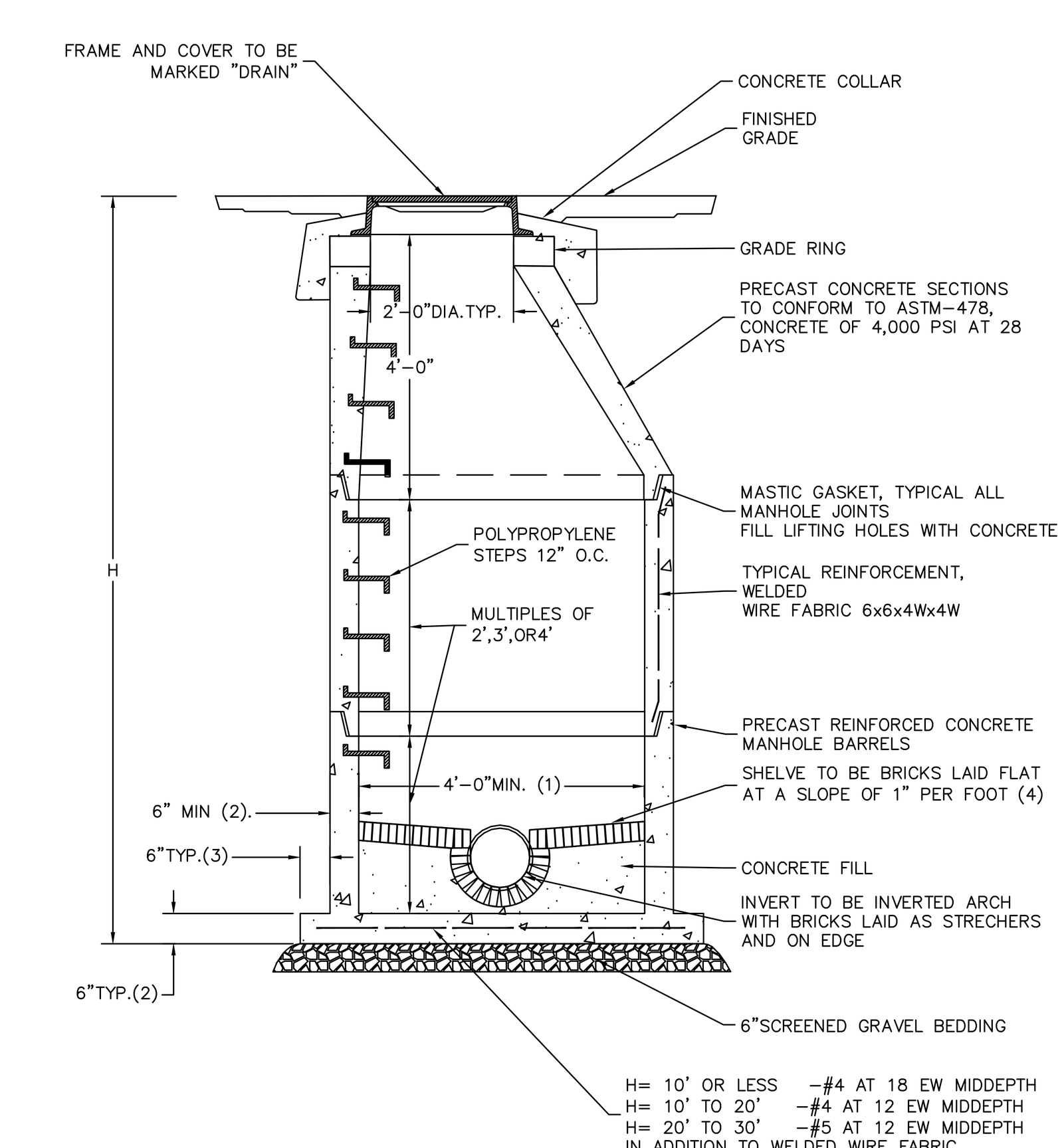


CATCH BASIN WITHOUT GUTTERMOUTH

NOTES:
1. ALL CAST IN PLACE CONCRETE TO HAVE A MINIMUM 28 DAY STRENGTH OF 3000 LBS PER SQ. INCH, USING 3/4"MAXIMUM SIZE AGGREGATE
2. REINFORCING STEEL BARS ARE DEFORMED BARS OF BILLET STEEL ASTM A615 GRADE 60
3. WELDED WIRE FABRIC CONFORMS TO ASTM A185
4. CAST IRON FRAME TO BE MARKED "DRAIN".
5. DESIGN LIVE LOAD – HS 20 – 44
6. MINIMUM COVER FOR REINFORCING IN WALLS OR SLABS POURED AGAINST EARTH SHALL BE 3 INCHES. ALL OTHERS SHALL BE 2 INCHES UNLESS OTHERWISE NOTED
7. USE 2'–0" LENGTHS OF PIPE STUBS AT ALL MANHOLES FOR VC OR AC PIPE. USE 4'–0" MAX. LENGTHS OF PIPE STUBS AT ALL MANHOLES FOR RC, DI OR PVC.
8. ALL MANHOLES SHALL BE CONSTRUCTED OF REINFORCED CONCRETE SHOP DRAWINGS SUBMITTALS SHALL SHOW ALL REINFORCING DETAILS

4 CATCH BASIN

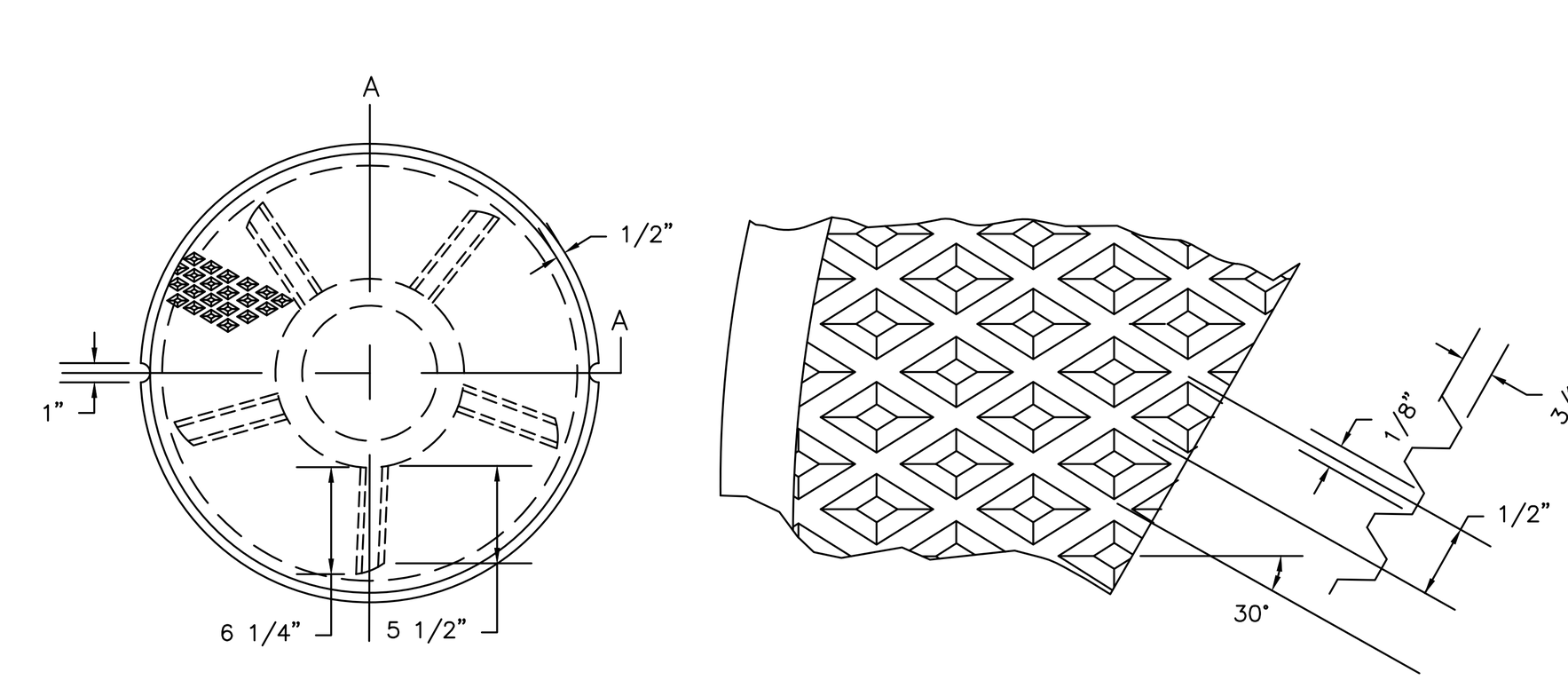
N.T.S.



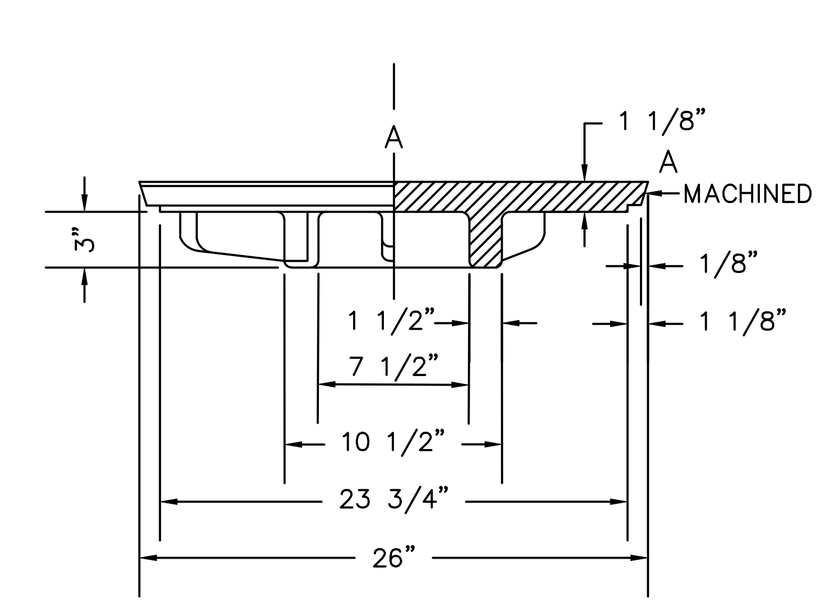
NOTES:
1. 5'–0"DIAMETER FOR ALL MANHOLE DEPTHS GREATER THAN 20 FEET OR WHEN ORDERED BY THE ENGINEER
2. 6" MIN. WALL THICKNESS AND 7 INCH MIN. BASE THICKNESS WITH 5'–0" DIAMETER MANHOLES
3. 6 INCH LIP OPTIONAL UNLESS OTHERWISE NOTED
4. CONCRETE INVERT AND SHELF MAY BE SUBSTITUTED IN STORM DRAIN MANHOLES AS DIRECTED BY THE ENGINEER
5. ALL CAST IN PLACE CONCRETE TO HAVE A MINIMUM 28 DAY STRENGTH OF 3000 LBS PER SQ. INCH, USING 3/4"MAXIMUM SIZE AGGREGATE
6. REINFORCING STEEL BARS ARE DEFORMED BARS OF BILLET STEEL ASTM A615 GRADE 60
7. WELDED WIRE FABRIC CONFORMS TO ASTM A185
8. CAST IRON FRAME, TYPE "A" AND COVER TYPE "A" TO BE MARKED EITHER "SEWER" OR "DRAIN".
9. DESIGN LIVE LOAD – HS 20 – 44
10. MINIMUM COVER FOR REINFORCING IN WALLS OR SLABS POURED AGAINST EARTH SHALL BE 3 INCHES. ALL OTHERS SHALL BE 2 INCHES UNLESS OTHERWISE NOTED
11. USE 2'–0" LENGTHS OF PIPE STUBS AT ALL MANHOLES FOR VC OR AC PIPE. USE 4'–0" MAX. LENGTHS OF PIPE STUBS AT ALL MANHOLES FOR RC, DI OR PVC.
12. ALL MANHOLES SHALL BE CONSTRUCTED OF REINFORCED CONCRETE SHOP DRAWINGS SUBMITTALS SHALL SHOW ALL REINFORCING DETAILS

5 DRAINAGE MANHOLE (DMH)

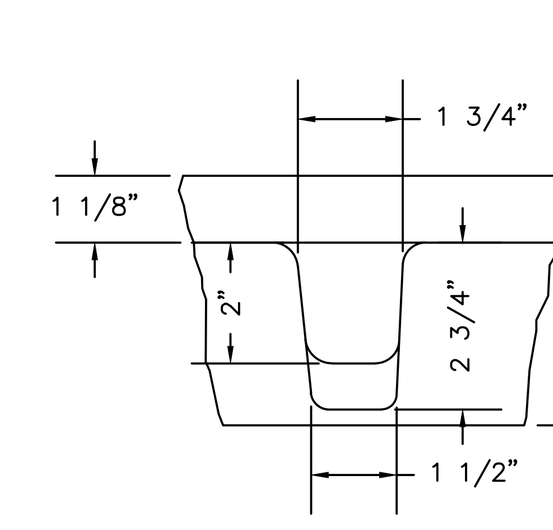
N.T.S.



DETAIL OF TREAD



MANHOLE COVER FOR TYPE A & B FRAMES

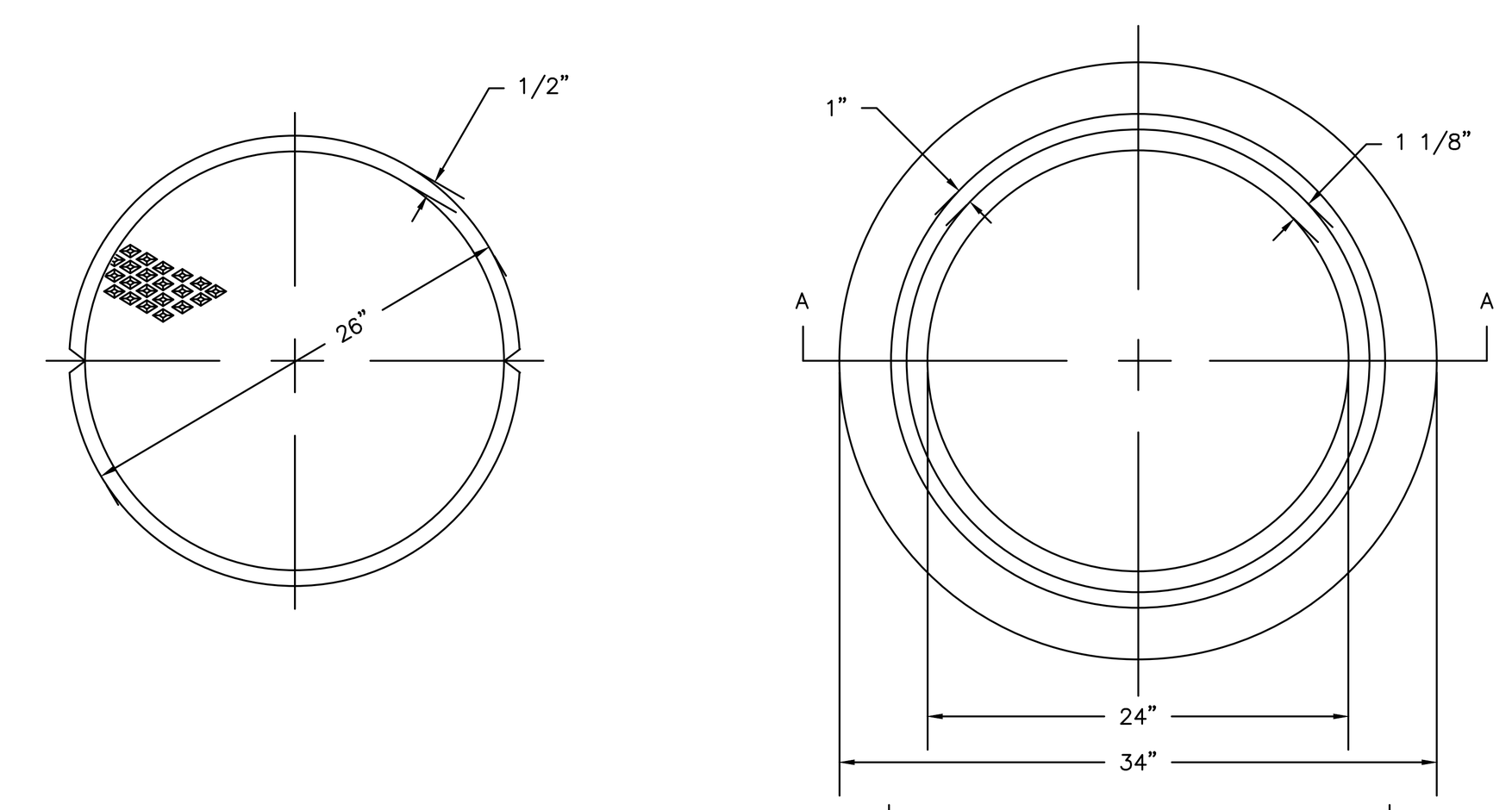


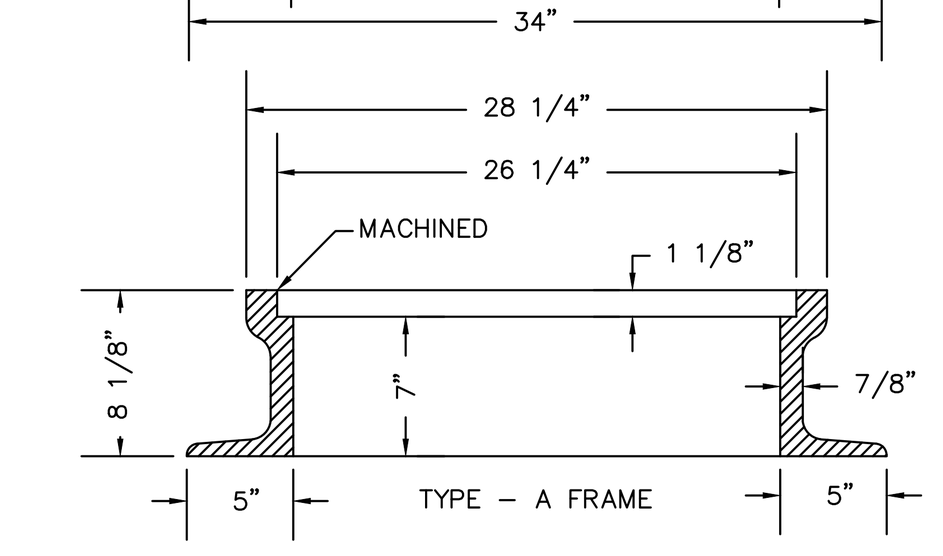
DETAIL OF FIN

NOTES:
1. MINIMUM COVER MASS – 200 LBS
2. MATERIAL – CAST IRON – SEE STANDARD SPECIFICATIONS WITH NO BLACK ASPHALT COATING ALLOWED

6 MANHOLE COVER

N.T.S.





NOTES:
1. MINIMUM MASS –265 LBS
2. MATERIAL – CAST IRON – SEE STANDARD SPECIFICATIONS WITH NO BLACK ASPHALT COATING ALLOWED

7 MANHOLE FRAME

N.T.S.

DECISION DATE: ______________________

ENDORSEMENT DATE: ______________________

MEDWAY PLANNING & ECONOMIC DEVELOPMENT BOARD

DORE + WHITTIER

MASSACHUSETTS
260 MERRIMAC STREET BUILDING 7, 2ND FLOOR
NEWBURYPORT, MA 01950
P: (978) 499-2999

VERMONT
212 BATTERY STREET
BURLINGTON, VT 05401
P: (802) 863-1428

LANGAN

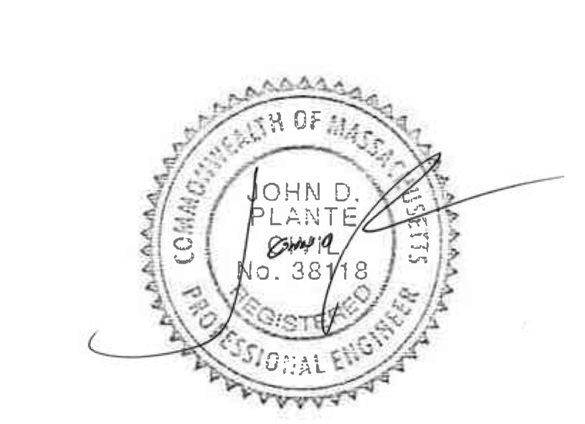
Langan Engineering and Environmental Services, LLC.
100 Cambridge Street, Suite 1310
Boston, MA 02114
T: 617.824.9100 F: 617.824.9101 www.langan.com

MEDWAY MUNICIPAL COMPLEX

120 MAIN STREET, MEDWAY, MA 02053

PROJECT NUMBER: 151072201

SEAL AND SIGNATURE:



REVISIONS:

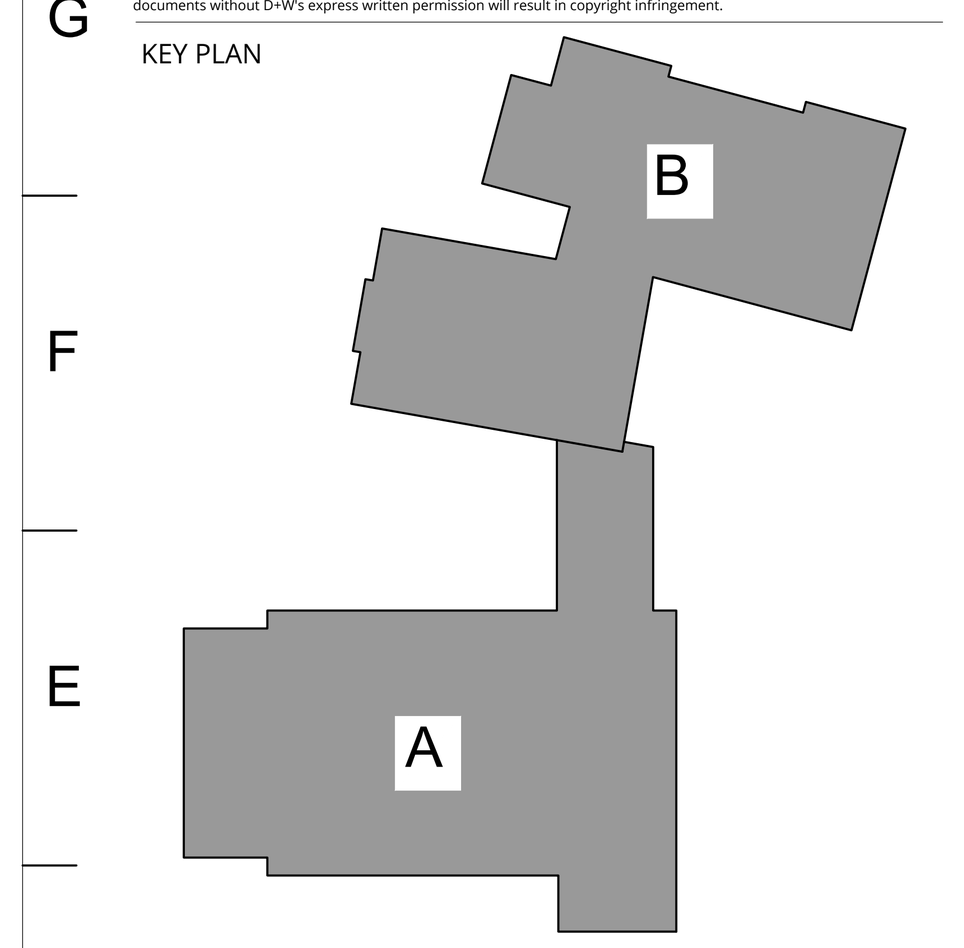
NO.	DATE	TITLE
1	09/18/2026	PEER REVIEW COMMENT RESPONSE

ISSUE TITLE AND DATE:

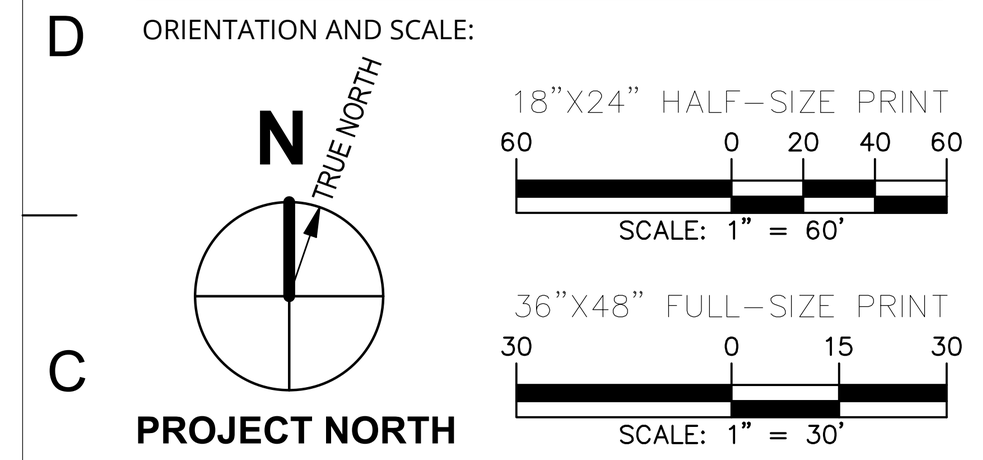
PERMIT DRAWINGS
7/20/2026

COPYRIGHT © 2023 by Dore & Whittier Architects, Inc. (D+W). These documents are D+W's instruments of service and as such, D+W retains all copyrights, common law, and statutory rights. Use of these documents without D+W's express written permission will result in copyright infringement.

KEY PLAN



ORIENTATION AND SCALE:

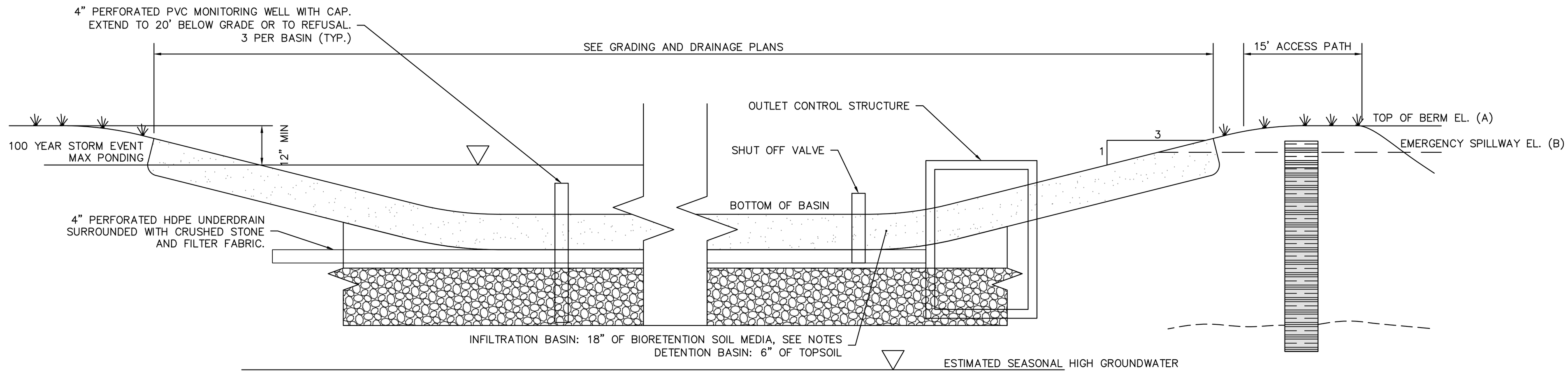


SHEET TITLE:

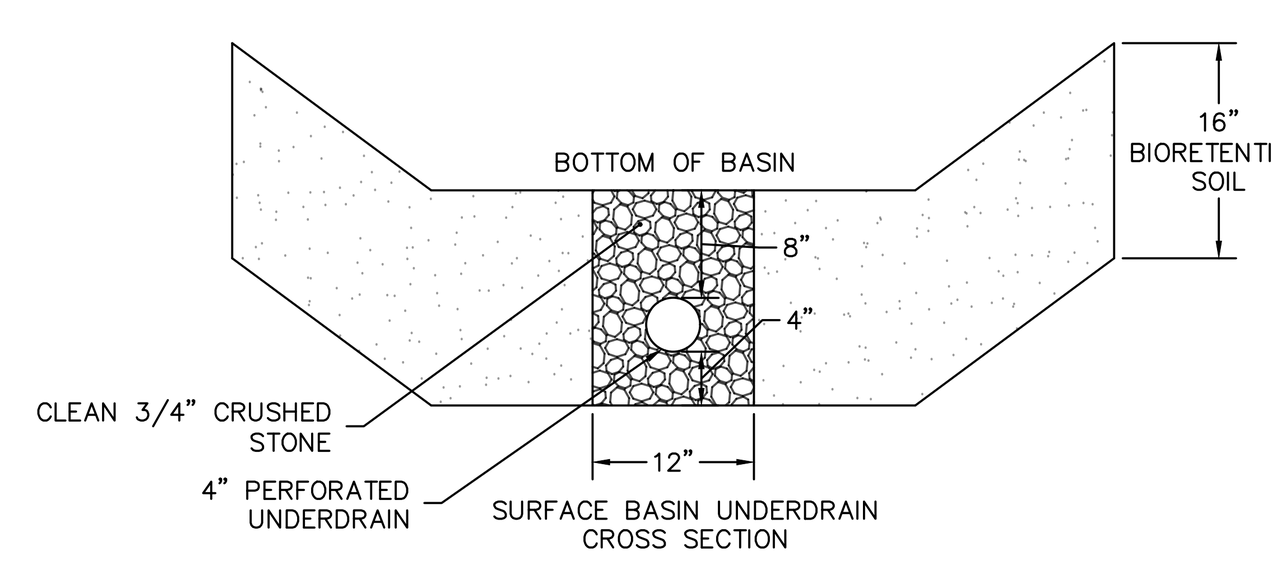
GRADING & DRAINAGE DETAILS I

SHEET NUMBER:

CG501



NOTES:
1. MATERIALS TO BE USED IN THE BASIN PLANTING AREAS SHALL BE INSPECTED AND DETERMINED TO BE FREE FROM PURPLE LOOSESTRIFE (LYTHRUM SALICARIA), COMMON REED (PHRAGMITES AUSTRALIS), OR REED CANARYGRASS (PHALARIS ARUNDINACEA).
2. ENGINEER TO OBSERVE BASIN SOILS DURING EXCAVATION TO ENSURE ALL UNSUITABLE SOILS HAVE BEEN REMOVE PRIOR TO FINAL GRADING.
3. COMPACTION OF BASINS AREAS AND REQUIRED BACKFILL SHALL BE MINIMIZED TO THE MAXIMUM EXTENT FEASIBLE BY THE USE OF EXCAVATION HOES, LIGHT EQUIPMENT WITH TURF TYPE TIRES, OR WIDE TRACK EQUIPMENT.
4. IF COMPACTION DOES OCCUR IN BASIN, THE COMPACTED ZONE SHALL BE TILLED TO REFRACTURE AT LEAST 12" OF NATURAL SOIL BEFORE BACKFILLED WITH SOIL MIX.
5. WHEN BACKFILLING BASIN, PLACE SOIL IN LIFTS OF 6–12" AND USE LIGHT EQUIPMENT ONLY WHEN GRADING WITHIN THE BASIN. HEAVY EQUIPMENT CAN BE USED AROUND THE PERIMETER OF THE BASIN.
6. ALLOW SOIL MIXTURE TO SETTLE NATURALLY THROUGH RAIN EVENTS OR PRESOAK AFTER PLACEMENT.
7. BIORETENTION SOIL MIX AS PER LANDSCAPE SERIES.
8. SEED BASIN WITH MEADOW MIX AS PER LANDSCAPE SERIES.
9. SEED SHOULDERS OF BASINS WITH MEADOW MIX B AS PER LANDSCAPE SERIES.
10. PLANTS AND SEED MIXES SHALL BE FIELD LOCATED BY A WETLAND SCIENTIST.

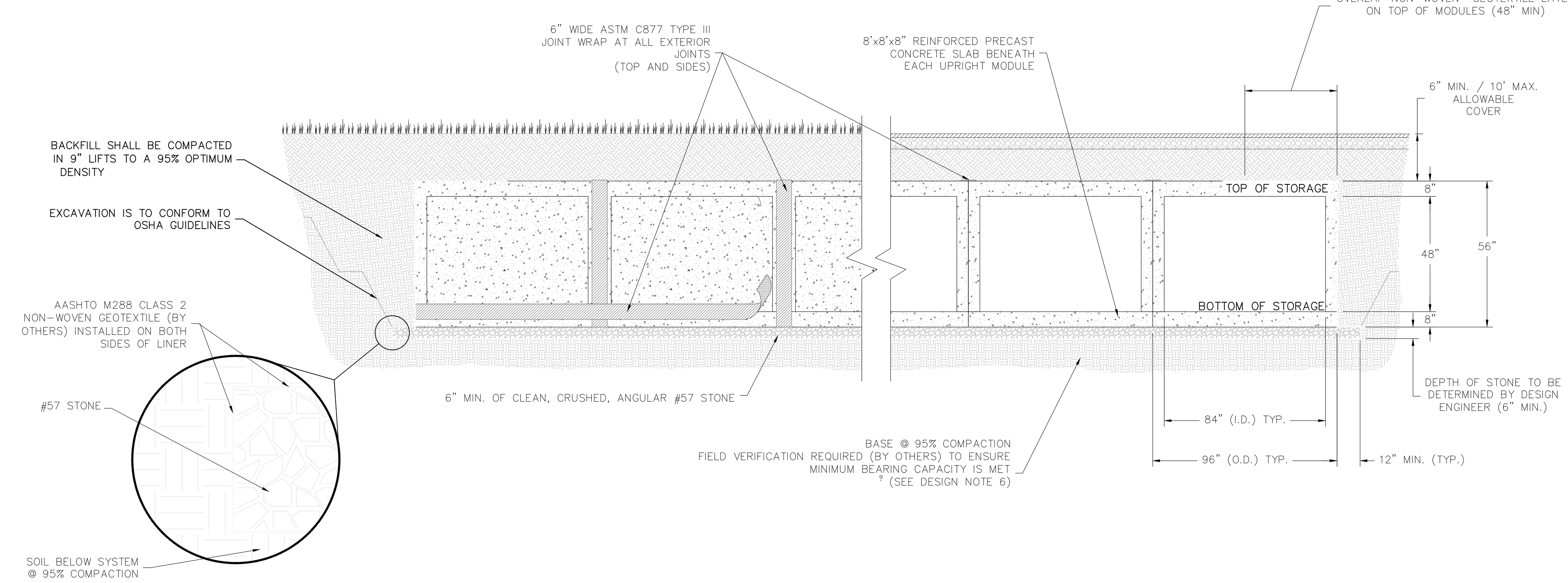


BASIN	TOP OF BERM	EMERGENCY SPILLWAY	100 YEAR STORM EVENT MAX PONDING	BOTTOM OF BASIN	ESTIMATED SEASONAL HIGH GROUNDWATER
A1	244	243	242.91	240	237
A2	242	241	240.64	238	236

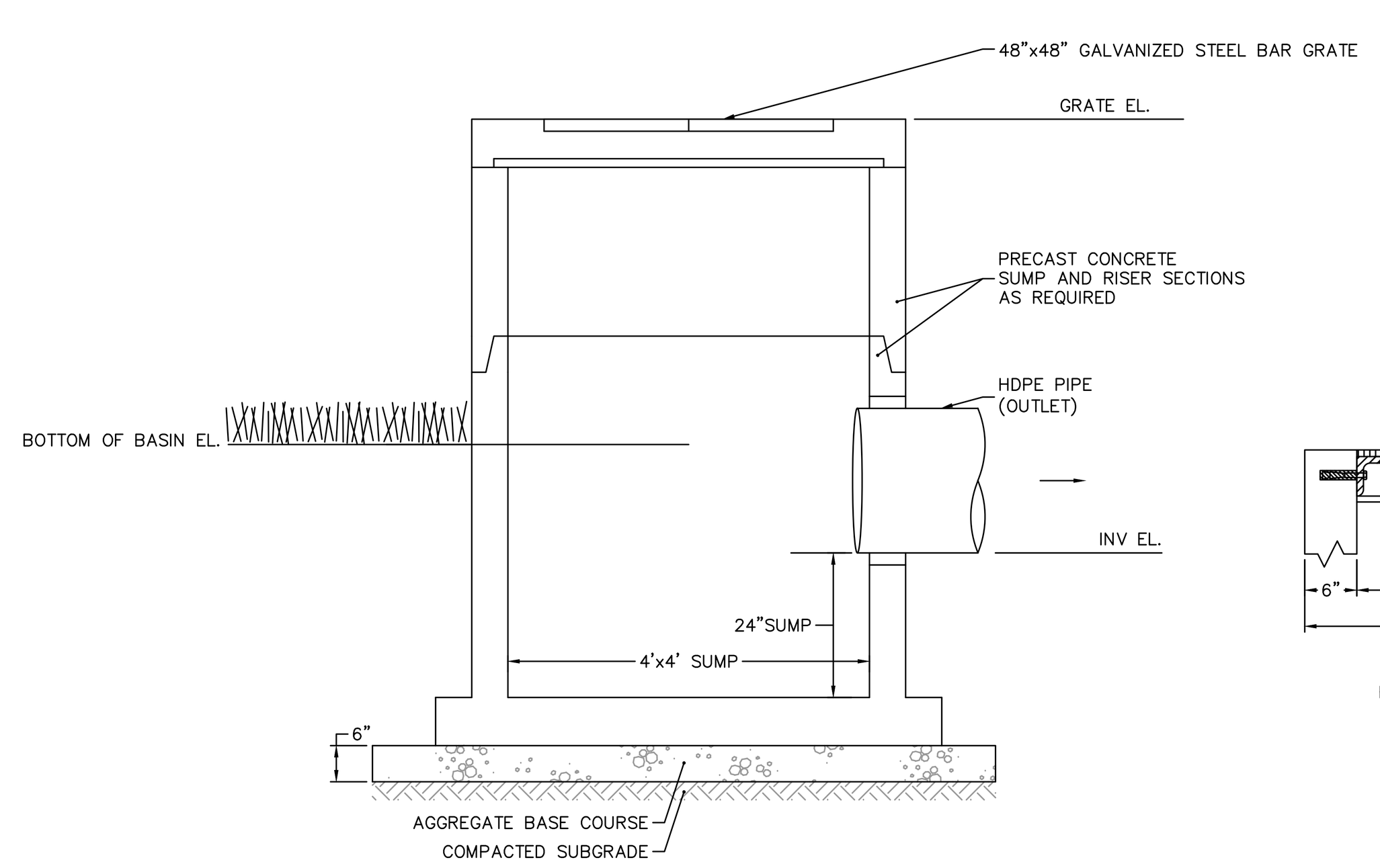
1 SURFACE BASIN
N.T.S.

DESIGN NOTES:
1. CONCRETE – 5,000 PSI, 28 DAYS
2. REINFORCING STEEL CONFORMS TO LATEST ASTM A615
3. H–20 DESIGN LOADING PER AASHTO HS–20–44
4. EACH MODULE SHALL BE EQUIPPED WITH FOUR LIFTING POINTS FOR USE WITH A 4–HOOK WIRE ROPE OR CHAIN.
5. CONTRACTOR SHALL BE RESPONSIBLE FOR INSTALLING SYSTEM TO MEET PROJECT SPECIFICATIONS ON WATERTIGHTNESS. ? MINIMUM SUBSOIL BEARING CAPACITY IS BASED ON MAXIMUM GRADE OVER SYSTEM AND DEPTH OF BASE STONE. INCREASING BASE STONE WILL REDUCE BEARING PRESSURE AT BOTTOM OF STONE LAYER. BACKFILL MATERIAL SHALL CONSIST OF SELECT NATIVE, CLEAN OR STRUCTURAL FILL MATERIAL FREE OF ROCKS LARGER THAN 3", SHARP OBJECTS, DELETERIOUS MATERIALS, TRASH, DEBRIS OR ORGANICS.
6. INDIVIDUAL STORMWATER MODULES SHALL BE STAND ALONE AND ABLE TO BE INSTALLED WITHOUT SUPPORT OF ADJACENT MODULES OR TEMPORARY SUPPORT DURING INSTALLATION.
7. MODULES MUST BE 8' BY 8' IN PLAN AREA AND HAVE A BEARING AREA TO PLAN AREA RATIO OF NOT LESS THAN 0.141

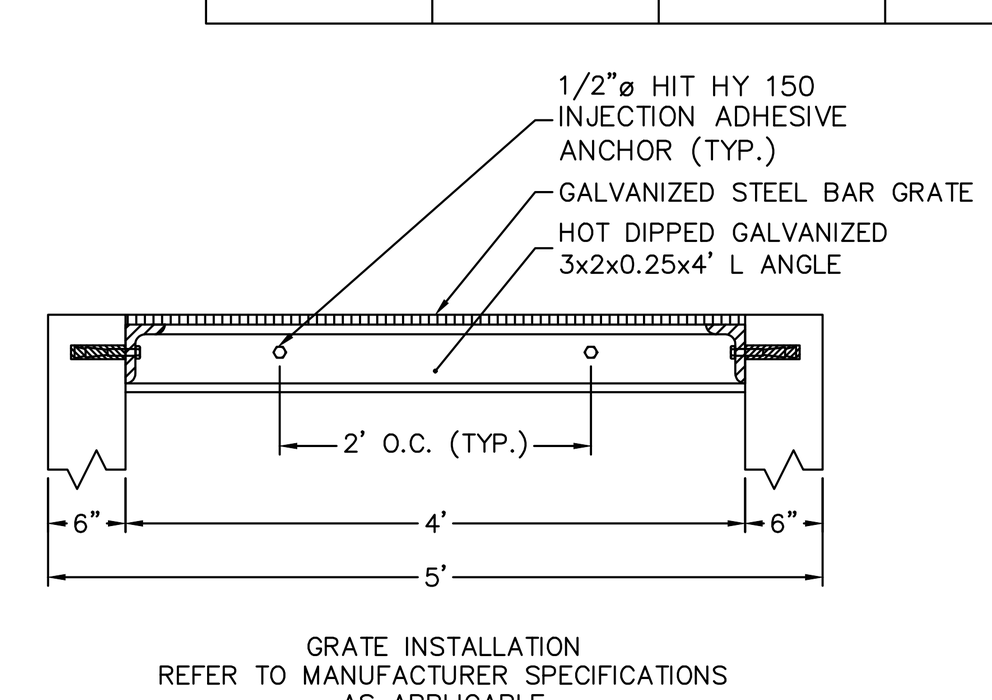
SYSTEM	MODULE QUANTITY	ROWS	MODULES/ROW	STORAGE VOLUME	BOTTOM OF STORAGE	TOP OF STORAGE
B1	48	3	16	10,800 CF	236	240



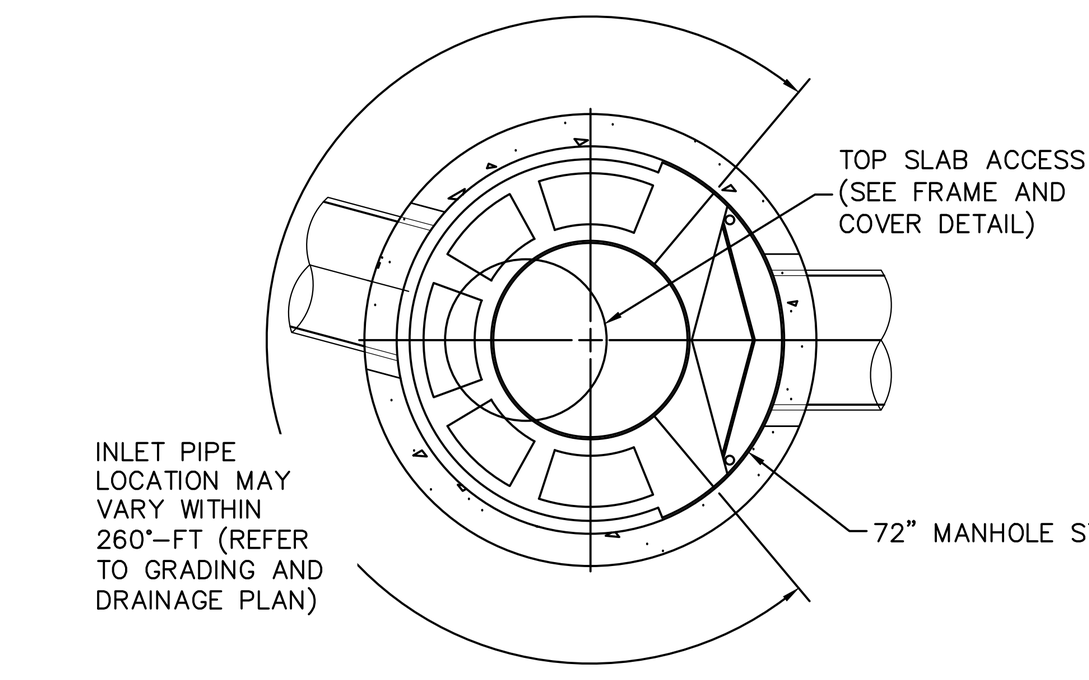
2 SUBSURFACE DETENTION SYSTEM
N.T.S.



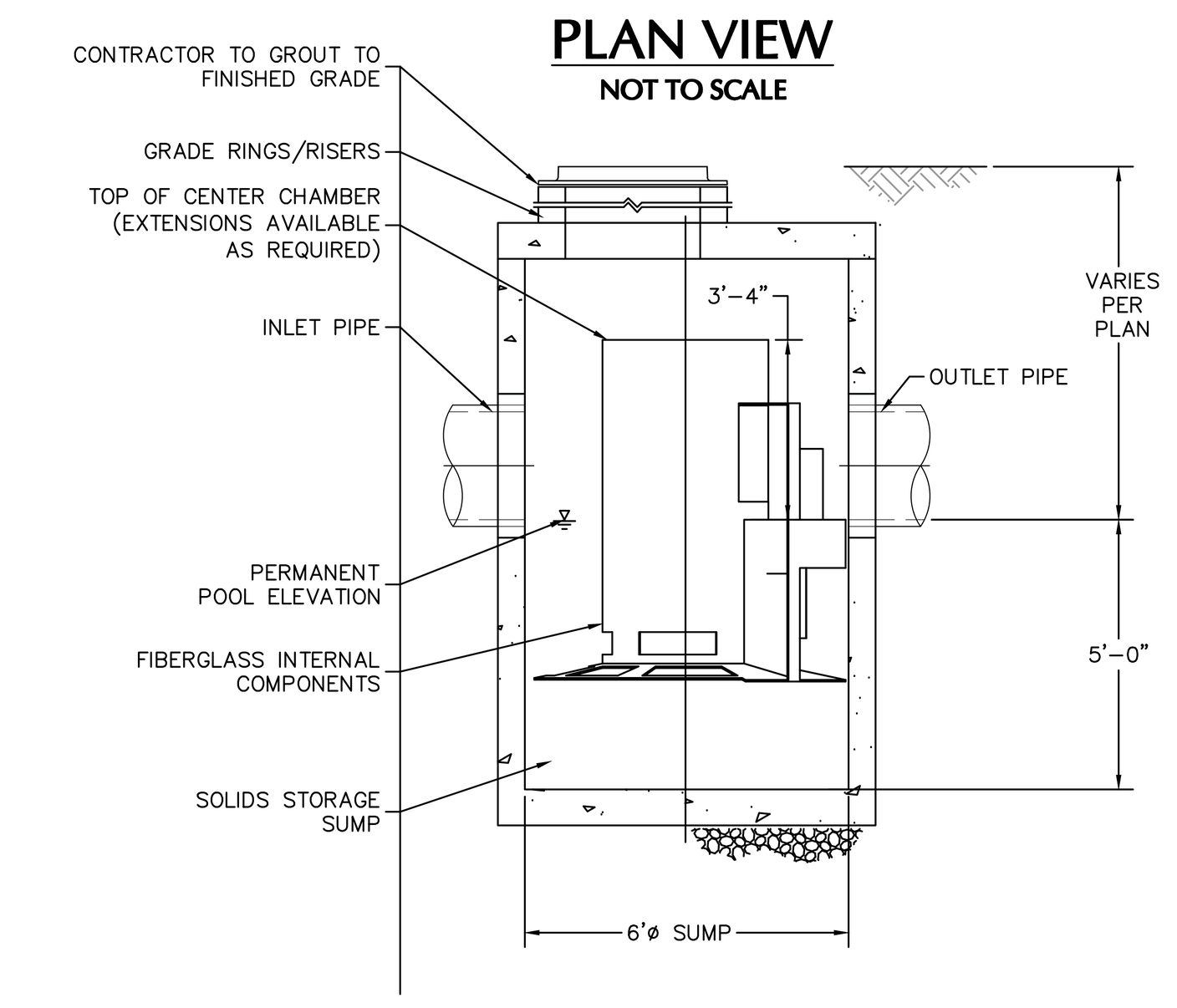
BASIN	STRUCTURE NAME	BOTTOM OF BASIN EL.	GRATE EL.	OUTLET PIPE INVERT EL.	OUTLET PIPE DIAMETER
A1	OCS-A1-101	240	242.60	238	18
A2	OCS-A2-101	238	240.30	237	24



3 OUTLET CONTROL STRUCTURE - SURFACE BASIN
N.T.S.



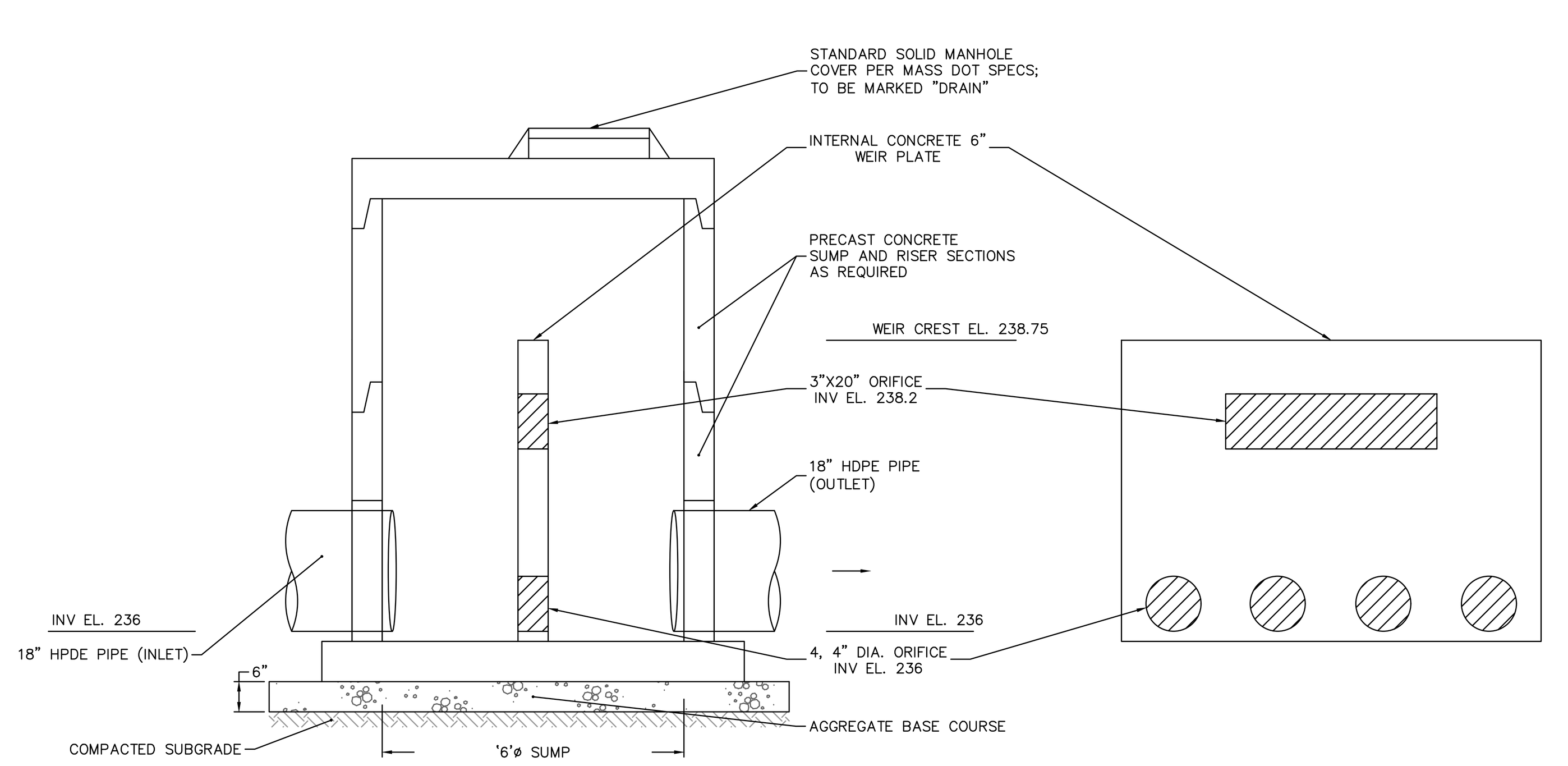
PLAN VIEW
NOT TO SCALE



ELEVATION
NOT TO SCALE

INSTALLATION NOTES
A. MANUFACTURER TO PROVIDE ALL MATERIALS UNLESS NOTED OTHERWISE.
B. ANY SUB–BASE, BACKFILL DEPTH, AND/OR ANTI–FLOTATION PROVISIONS ARE SITE–SPECIFIC DESIGN CONSIDERATIONS AND SHALL BE SPECIFIED BY ENGINEER OF RECORD.
C. CONTRACTOR TO PROVIDE EQUIPMENT WITH SUFFICIENT LIFTING AND REACH CAPACITY TO LIFT AND SET THE WQU MANHOLE STRUCTURE.
D. CONTRACTOR TO INSTALL JOINT SEALANT BETWEEN ALL STRUCTURE SECTIONS AND ASSEMBLE STRUCTURE.
E. CONTRACTOR TO PROVIDE, INSTALL, AND GROUT INLET AND OUTLET PIPE(S). MATCH PIPE INVERTS WITH ELEVATIONS SHOWN. ALL PIPE CENTERLINES TO MATCH PIPE OPENING CENTERLINES.
F. CONTRACTOR TO TAKE APPROPRIATE MEASURES TO ASSURE UNIT IS WATER TIGHT, HOLDING WATER TO FLOWLINE INVERT MINIMUM. IT IS SUGGESTED THAT ALL JOINTS BELOW PIPE INVERTS ARE GROUTED.

5 WATER QUALITY UNIT (WQU)
N.T.S.



4 OUTLET CONTROL STRUCTURE - SUBSURFACE SYSTEM
N.T.S.

DECISION DATE: ______

ENDORSEMENT DATE: ______

MEDWAY PLANNING & ECONOMIC DEVELOPMENT BOARD

DORE + WHITTIER
MASSACHUSETTS
260 MERRIMAC STREET BUILDING 7, 2ND FLOOR
NEWBURYPORT, MA 01950
P: (978) 499-2999

VERMONT
212 BATTERY STREET
BURLINGTON, VT 05401
P: (802) 863-1428

LANGAN
Langan Engineering and Environmental Services, LLC.
100 Cambridge Street, Suite 1310
Boston, MA 02114
T: 617.824.9100 F: 617.824.9101 www.langan.com

MEDWAY MUNICIPAL COMPLEX
120 MAIN STREET,
MEDWAY, MA 02053

PROJECT NUMBER: 151072201

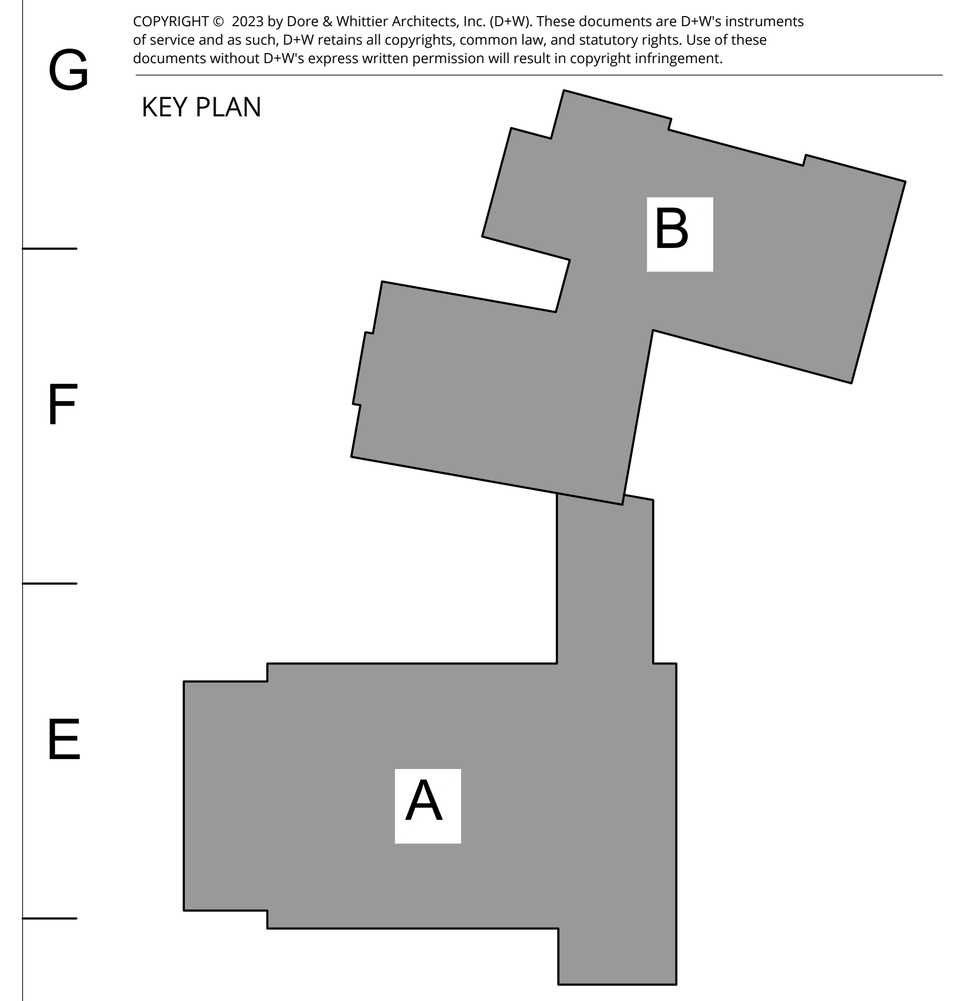
SEAL AND SIGNATURE:

REVISIONS:

NO.	DATE	TITLE
1	09/18/2026	PEER REVIEW COMMENT RESPONSE

ISSUE TITLE AND DATE:
PERMIT DRAWINGS
7/20/2026

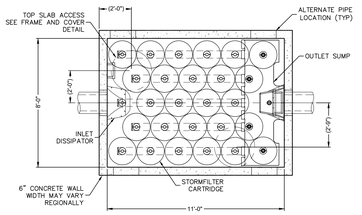
KEY PLAN



ORIENTATION AND SCALE:
PROJECT NORTH
18"X24" HALF-SIZE PRINT SCALE: 1" = 60'
36"X48" FULL-SIZE PRINT SCALE: 1" = 30'

SHEET TITLE:
GRADING & DRAINAGE DETAILS II

SHEET NUMBER:
CG502



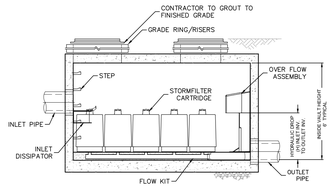
CARTRIDGE SELECTION	NUMBER OF CARTRIDGES: 25
CARTRIDGE HEIGHT	27"
RECOMMENDED HYDRAULIC DROP (H)	3.05'
SPECIFIC FLOW RATE (gpm/sf)	1.67* gpm/sf
CARTRIDGE FLOW RATE (gpm)	18.79

* 1.67 gpm/sf SPECIFIC FLOW RATE IS APPROVED WITH PHOSPHOSORB® (PSORB) MEDIA ONLY



FRAME AND COVER
(DIAMETER VARIES)
N.T.S.

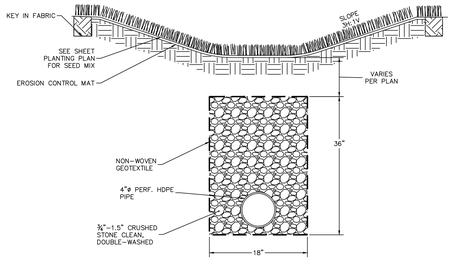
STORMWATER SYSTEM
UNDERGROUND
DETENTION SYSTEM D-3



GENERAL NOTES
1. CONTECH TO PROVIDE ALL MATERIALS UNLESS NOTED OTHERWISE.
2. DIMENSIONS MARKED WITH ( ) ARE REFERENCE DIMENSIONS. ACTUAL DIMENSIONS MAY VARY.
3. FOR SITE SPECIFIC DRAWINGS WITH DETAILED VAULT DIMENSIONS AND WEIGHTS, PLEASE CONTACT YOUR CONTECH ENGINEERED SOLUTIONS LLC REPRESENTATIVE. www.ContechES.com
4. STORMFILTER WATER QUALITY STRUCTURE SHALL BE IN ACCORDANCE WITH ALL DESIGN DATA AND INFORMATION CONTAINED IN THIS DRAWING.
5. STRUCTURE SHALL MEET AASHTO HS20 LOAD RATING, ASSUMING EARTH COVER OF 0' – 5' AND GROUNDWATER ELEVATION AT, OR BELOW, THE OUTLET PIPE INVERT ELEVATION. ENGINEER OF RECORD TO CONFIRM ACTUAL GROUNDWATER ELEVATION. CASTINGS SHALL MEET AASHTO M306 AND BE CAST WITH THE CONTECH LOGO.
6. FILTER CARTRIDGES SHALL BE MEDIA-FILLED, PASSIVE, SIPHON ACTUATED, RADIAL FLOW, AND SELF CLEANING. RADIAL MEDIA DEPTH SHALL BE 7-INCHES. FILTER MEDIA CONTACT TIME SHALL BE AT LEAST 38 SECONDS.
7. SPECIFIC FLOW RATE IS EQUAL TO THE FILTER TREATMENT CAPACITY (gpm) DIVIDED BY THE FILTER CONTACT SURFACE AREA (sq ft).
8. STORMFILTER STRUCTURE SHALL BE PRECAST CONFORMING TO ASTM C-857 AND AASHTO LOAD FACTOR DESIGN METHOD.

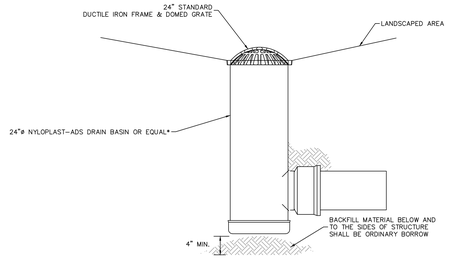
INSTALLATION NOTES
A. ANY SUB-BASE, BACKFILL DEPTH, AND/OR ANTI-FLOTATION PROVISIONS ARE SITE-SPECIFIC DESIGN CONSIDERATIONS AND SHALL BE SPECIFIED BY ENGINEER OF RECORD.
B. CONTRACTOR TO PROVIDE EQUIPMENT WITH SUFFICIENT LIFTING AND REACH CAPACITY TO LIFT AND SET THE STORMFILTER VAULT (LIFTING CLUTCHES PROVIDED).
C. CONTRACTOR TO INSTALL JOINT SEALANT BETWEEN ALL VAULT SECTIONS AND ASSEMBLE VAULT.
D. CONTRACTOR TO PROVIDE, INSTALL, AND GROUT PIPES. MATCH OUTLET PIPE INVERT WITH OUTLET BAY FLOOR.
E. CONTRACTOR TO TAKE APPROPRIATE MEASURES TO PROTECT CARTRIDGES FROM CONSTRUCTION-RELATED EROSION RUNOFF.

1 WATER QUALITY VAULT
N.T.S.



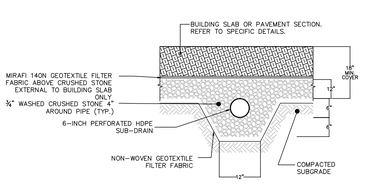
NOTE:
1. SWALE LINING SHALL BE A BIODEGRADABLE EROSION CONTROL BLANKET SUCH AS BIONET® S150BN/R OR EQUAL WITH A DESIGN PERMISSIBLE SHEAR STRESS UNVEGETATED VELOCITY OF 8 FT./S.
2. SWALE SHALL BE VEGETATED PER PLANTING PLAN.
3. STONE CHECK DAMS SHALL BE INSTALLED IN THE SWALE BETWEEN EVERY CURB INLET.

2 VEGETATED SWALE WITH UNDERDRAIN
N.T.S.



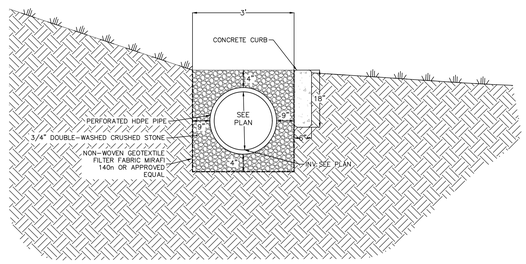
NOTES:
1. GRATES/SOLID COVER SHALL BE DUCTILE IRON PER ASTM A536 GRADE 70-50-05.2
2. FRAMES SHALL BE DUCTILE IRON PER ASTM A536 GRADE 70-50-05
3. DRAIN BASIN TO BE CUSTOM MANUFACTURED ACCORDING TO PLAN DETAILS. RISERS ARE NEEDED FOR BASINS OVER 84" DUE TO SHIPPING RESTRICTIONS.
4. DRAINAGE CONNECTION STUB JOINT TIGHTNESS SHALL CONFORM TO ASTM D3212 FOR CORRUGATED HDPE (ADS N-12/HANCOR DUAL WALL), N-12 HP, & PVC SEWER.
5. ADAPTERS CAN BE MOUNTED ON ANY ANGLE 0° TO 360°.

3 YARD DRAIN (YD)
N.T.S.

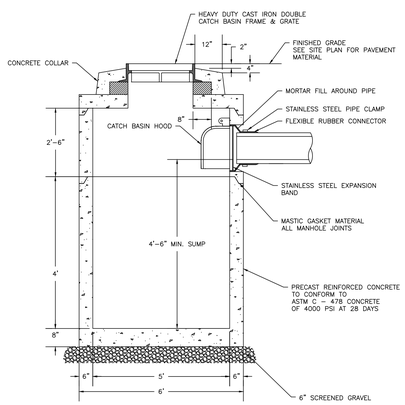


NOTES:
1. CONTRACTOR SHALL BREAK OUT A SEPARATE ALLOWANCE FOR SUBDRAINAGE.
2. INSTALL PER LAYOUT ON DRAINAGE PLAN.

4 SUBDRAINAGE SECTION
N.T.S.



5 LEVEL SPREADER WITH PERFORATED PIPE
N.T.S.



6 DOUBLE CATCH BASIN
N.T.S.

DECISION DATE: _____

ENDORSEMENT DATE: _____

MEDWAY PLANNING & ECONOMIC DEVELOPMENT BOARD

DORE + WHITTIER
MASSACHUSETTS
260 MERRIMAC STREET BUILDING 7, 2ND FLOOR
NEWBURYPORT, MA 01950
P: (978) 499-2999

VERMONT
212 BATTERY STREET
BURLINGTON, VT 05401
P: (802) 863-1428

LANGAN
Langan Engineering and Environmental Services, LLC.
100 Cambridge Street, Suite 1310
Boston, MA 02114
T: 617.824.9100 F: 617.824.9101 www.langan.com

MEDWAY MUNICIPAL COMPLEX
120 MAIN STREET,
MEDWAY, MA 02053

PROJECT NUMBER: 151072201

SEAL AND SIGNATURE:

COMMONWEALTH OF MASSACHUSETTS JOHN D. PLANTE No. 38915 REGISTERED PROFESSIONAL ENGINEER

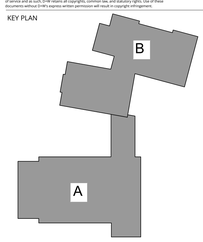
REVISIONS:

NO.	DATE	TITLE
1	09/18/2026	PEER REVIEW COMMENT RESPONSE

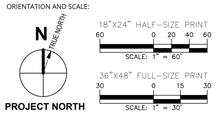
ISSUE TITLE AND DATE:
PERMIT DRAWINGS
7/20/2026

COPYRIGHT © 2023 by Dore & Whittier Architects, Inc. (D+W). These documents are D+W's instruments of service and as such, D+W retains all copyrights, common law, and statutory rights. Use of these documents without D+W's express written permission will result in copyright infringement.

KEY PLAN



ORIENTATION AND SCALE:



SHEET TITLE:
GRADING & DRAINAGE DETAILS III

SHEET NUMBER:
CG503



DECISION DATE: _____

ENDORSEMENT DATE: _____

MEDWAY PLANNING & ECONOMIC DEVELOPMENT BOARD

DORE + WHITTIER

MASSACHUSETTS
260 MERRIMAC STREET BUILDING 7, 2ND FLOOR
NEWBURYPORT, MA 01950
P: (978) 499-2999

VERMONT
212 BATTERY STREET
BURLINGTON, VT 05401
P: (802) 863-1428

LANGAN

Langan Engineering and Environmental Services, LLC.
100 Cambridge Street, Suite 1310
Boston, MA 02114
T: 617.824.9100 F: 617.824.9101 www.langan.com

MEDWAY MUNICIPAL COMPLEX

120 MAIN STREET,
MEDWAY, MA 02053

PROJECT NUMBER: 151072201

SEAL AND SIGNATURE:

COMMONWEALTH OF MASSACHUSETTS
JOHN D. PLAITES
No. 36918
REGISTERED PROFESSIONAL ENGINEER

REVISIONS:

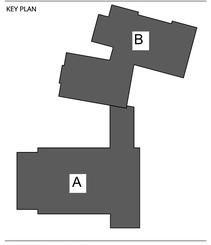
NO.	DATE	TITLE
1	09/18/2026	PEER REVIEW COMMENT RESPONSE

ISSUE TITLE AND DATE:

PERMIT DRAWINGS
7/20/2026

COPYRIGHT © 2023 by Dore & Whittier Architects, Inc. (D+W). These documents are D+W's instruments of service and as such, D+W retains all copyrights, common law, and statutory rights. Use of these documents without D+W's express written permission will result in copyright infringement.

KEY PLAN



ORIENTATION AND SCALE:

N TRUE NORTH
PROJECT NORTH

18"X24" HALF-SIZE PRINT
60 0 20 40 60
SCALE: 1" = 60'

36"X48" FULL-SIZE PRINT
30 0 15 30
SCALE: 1" = 30'

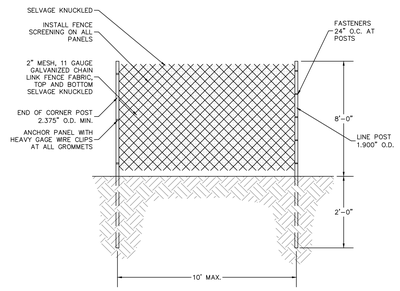
SHEET TITLE:

SOIL EROSION & SEDIMENT CONTROL PLAN

SHEET NUMBER:

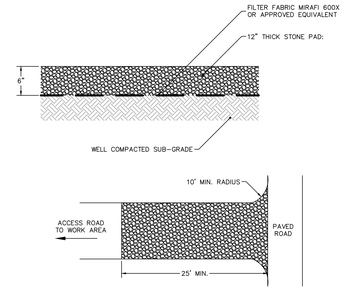
CE101

Date: 9/21/2026 Time: 03:03 User: hschur Style Table: Langan.stb Layout: CE101 Document Code: 151072201-0301-CE101-0101



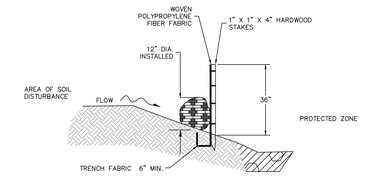
NOTES:
1. PIPE POSTS SHALL BE IMBEDDED INTO THE GROUND. PEDESTAL MOUNTED FENCING WILL ONLY BE ALLOWED AT AREAS APPROVED BY THE PROJECT MANAGER. WHEN ALLOWED, PROVIDE CONCRETE OR GALVANIZED-STEEL BASES FOR SUPPORTING POSTS. PROVIDE BLUE OR DARK COLORED REINFORCED SCRIM SHEETING ON ALL FENCING.

1 TEMPORARY CONSTRUCTION FENCE
N.T.S.



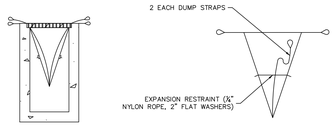
NOTES:
1. CONSTRUCTION PAD LOCATION TO BE SET BY CONTRACTOR AND LOCATED AS REQUIRED FOR CONSTRUCTION SEQUENCING

2 CONSTRUCTION ENTRANCE
N.T.S.



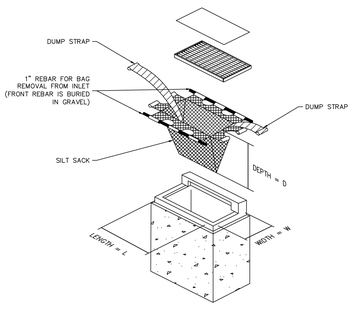
SECTION

3 COMPOST FILTER TUBE & SILT FENCE
N.T.S.

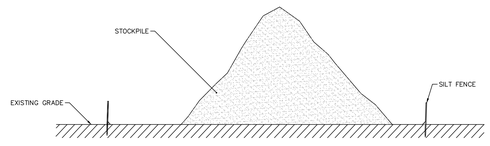


INSTALLATION DETAIL

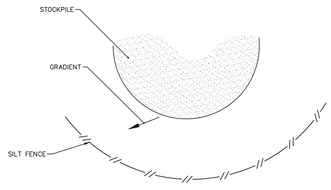
BAG DETAIL



4 SILT SACK INLET PROTECTION
N.T.S.



PROFILE

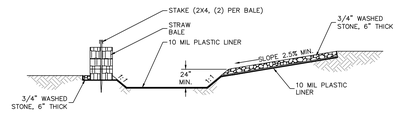


PLAN

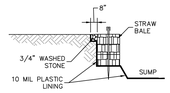
TEMPORARY SOIL/CONCRETE STOCKPILE LOCATIONS TO BE SET BY CONTRACTOR AND LOCATED AS REQUIRED FOR CONSTRUCTION SEQUENCING.

NOTE:
1. STOCK PILES TO BE PLACED ON POLY SHEETING
2. STOCK PILES TO BE COVERED WITH POLY SHEETING WHILE NOT IN USE

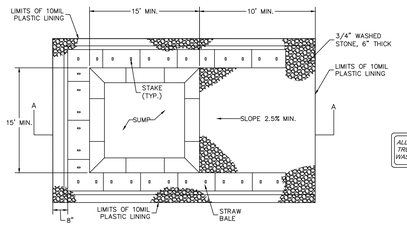
7 TEMPORARY SOIL/CONCRETE STOCKPILE
N.T.S.



SECTION A-A



ALTERNATE SECTION
USE WHERE MORE THAN ONE ACCESSIBLE SIDE IS NEEDED



PLAN

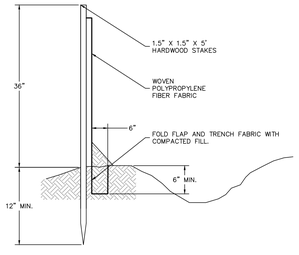


WASHOUT SIGN

CONCRETE WASHOUT AREA LOCATION TO BE SET BY CONTRACTOR AND LOCATED AS REQUIRED FOR CONSTRUCTION SEQUENCING.

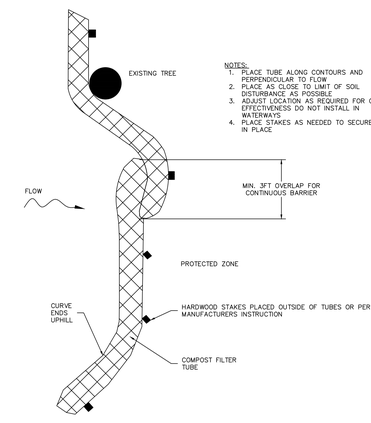
NOTES:
1. PIT IS SPECIFICALLY DESIGNATED, DIKED, AND IMPERVIOUS TO PREVENT CONTACT BETWEEN CONCRETE WASH AND STORMWATER.
2. WASH WATER SHALL NOT BE ALLOWED TO FLOW TO SURFACE WATER.
3. FACILITY MUST HOLD SUFFICIENT VOLUME TO CONTAIN CONCRETE WASTE WITH A MINIMUM FREEBOARD OF 12".
4. FACILITY SHALL NOT BE FILLED BEYOND 95% CAPACITY UNLESS A NEW FACILITY IS CONSTRUCTED.
5. SAW CUT PORTLAND CEMENT CONCRETE, RESIDUE FROM SAWCUT & GRINDING TO BE DISPOSED OF IN THE PIT.
6. CONCRETE WASHOUTS SHALL BE LOCATED A MINIMUM OF 100' FROM DRAINAGE WAYS, INLETS, & SURFACE WATERS.
7. MANUFACTURING CONCRETE WASHOUT DEVICES MAY BE USED IF REMOVED FROM THE SITE WHEN 95% FULL CAPACITY.
8. NO CONCRETE WORK SHALL BEGIN UNTIL WASHOUT AREA IS CONSTRUCTED.

5 CONCRETE WASHOUT AREA
N.T.S.



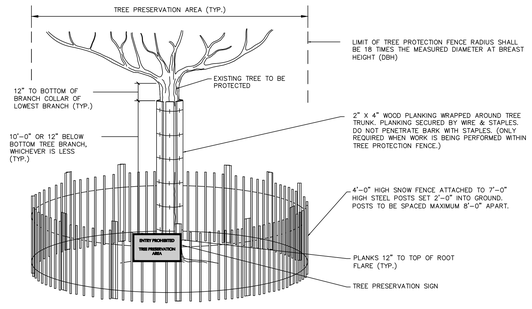
INSTALLATION NOTES:
1. EXCAVATE AND SECURE BOTTOM 6" OF SILT FENCE BELOW GRADE AS SHOWN.
2. EXCEPT FOR THE END POST, DRIVE ALL POSTS INTO THE GROUND AT BACK SIDE OF TRENCH SPACED A MAXIMUM OF 8 FT O. C.
3. SECURE FILTER FABRIC WITH DRAWSTRING TO POST WITH METAL FASTENERS AND REINFORCEMENT BETWEEN FASTENER AND FABRIC.

8 SILT FENCE
N.T.S.



PLAN VIEW

6 CONCRETE WASHOUT AREA
N.T.S.



9 TREE PROTECTION FENCING AND STAKING
N.T.S.

DECISION DATE: _____

ENDORSEMENT DATE: _____

MEDWAY PLANNING & ECONOMIC DEVELOPMENT BOARD

DORE + WHITTIER
MASSACHUSETTS
260 MERRIMAC STREET BUILDING 7, 2ND FLOOR
NEWBURYPORT, MA 01950
P: (978) 499-2999
VERMONT
212 BATTERY STREET
BURLINGTON, VT 05401
P: (802) 863-1428

LANGAN
Langan Engineering and Environmental Services, LLC.
100 Cambridge Street, Suite 1310
Boston, MA 02114
T: 617.824.9100 F: 617.824.9101 www.langan.com

MEDWAY MUNICIPAL COMPLEX
120 MAIN STREET,
MEDWAY, MA 02053

PROJECT NUMBER: 151072201

SEAL AND SIGNATURE:

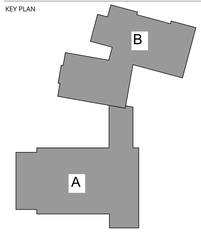
REVISIONS:

NO.	DATE	TITLE
1	09/18/2026	PEER REVIEW COMMENT RESPONSE

ISSUE TITLE AND DATE:
PERMIT DRAWINGS
7/20/2026

COPYRIGHT © 2023 by Dore & Whittier Architects, Inc. (D+W). These documents are D+W's instruments of service and as such, D+W retains all copyrights, common law, and statutory rights. Use of these documents without D+W's express written permission will result in copyright infringement.

KEY PLAN



ORIENTATION AND SCALE:
PROJECT NORTH
TRUE NORTH
18"X24" HALF-SIZE PRINT
60 0 0 20 40 60
SCALE: 1" = 60'
36"X48" FULL-SIZE PRINT
30 0 15 30
SCALE: 1" = 30'

SHEET TITLE:
SOIL EROSION & SEDIMENT CONTROL DETAILS

SHEET NUMBER:
CE501

Date: 9/21/2026 Time: 03:04 User: hschur Style Table: Langan.stb Layout: CE501 Document Code: 151072201-0301-CE501-0102



DECISION DATE: _____

ENDORSEMENT DATE: _____

MEDWAY PLANNING & ECONOMIC DEVELOPMENT BOARD

DORE + WHITTIER

MASSACHUSETTS
260 MERRIMAC STREET BUILDING 7, 2ND FLOOR
NEWBURYPORT, MA 01950
P: (978) 499-2999

VERMONT
212 BATTERY STREET
BURLINGTON, VT 05401
P: (802) 863-1428

LANGAN

Langan Engineering and Environmental Services, LLC.
100 Cambridge Street, Suite 1310
Boston, MA 02114
T: 617.824.9100 F: 617.824.9101 www.langan.com

MEDWAY MUNICIPAL COMPLEX
120 MAIN STREET,
MEDWAY, MA 02053

PROJECT NUMBER: 151072201

SEAL AND SIGNATURE:

COMMONWEALTH OF MASSACHUSETTS
JOHN D. PLAYTER
No. 36915
REGISTERED PROFESSIONAL ENGINEER

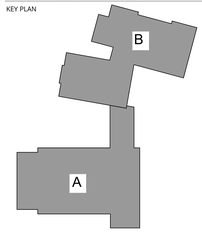
REVISIONS:

NO.	DATE	TITLE
1	09/18/2026	PEER REVIEW COMMENT RESPONSE

ISSUE TITLE AND DATE:
PERMIT DRAWINGS
7/20/2026

COPYRIGHT © 2023 by Dore & Whittier Architects, Inc. (D+W). These documents are D+W's instruments of service and as such, D+W retains all copyrights, common law, and statutory rights, Use of these documents without D+W's express written permission will result in copyright infringement.

KEY PLAN



ORIENTATION AND SCALE:



PROJECT NORTH

18"x24" HALF-SIZE PRINT
60 0 20 40 60
SCALE: 1" = 60'

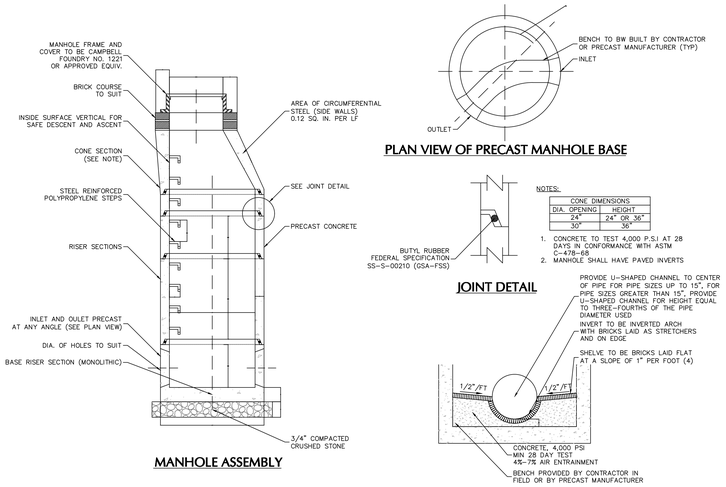
36"x48" FULL-SIZE PRINT
30 0 15 30
SCALE: 1" = 30'

SHEET TITLE:

UTILITY PLAN

SHEET NUMBER:

CU101



MANHOLE ASSEMBLY

PLAN VIEW OF PRECAST MANHOLE BASE

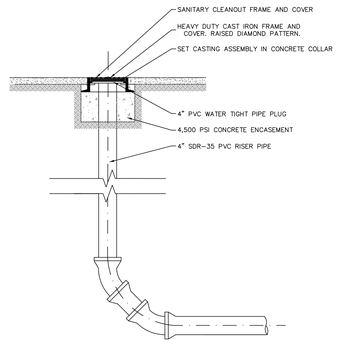
NOTES:

CONE DIMENSIONS	
DIA. OPENING	HEIGHT
24"	24" OR 36"
30"	36"

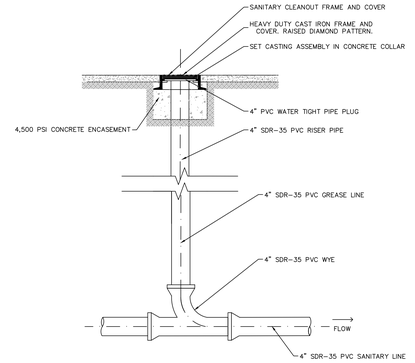
1. CONCRETE TO TEST 4,000 P.S.I AT 28 DAYS IN CONFORMANCE WITH ASTM C-478-68
2. MANHOLE SHALL HAVE PAVED INVERTS

JOINT DETAIL

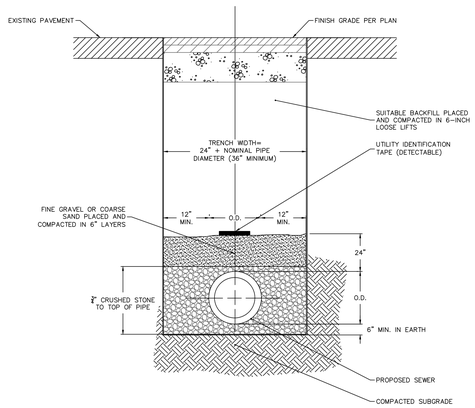
1 SEWER MANHOLE
N.T.S.



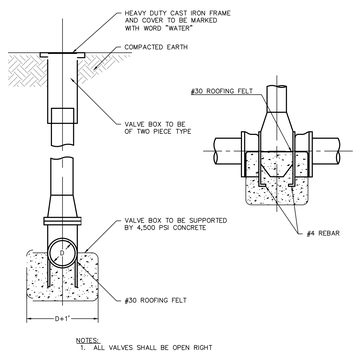
2 END OF LINE CLEANOUT



3 IN LINE CLEANOUT

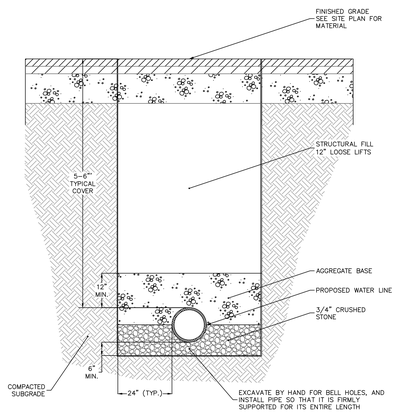


4 SANITARY TRENCH
N.T.S.



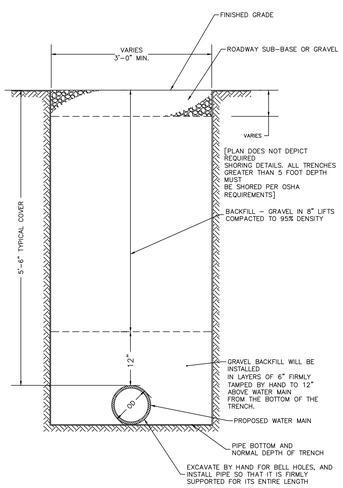
NOTES:
1. ALL VALVES SHALL BE OPEN RIGHT

5 GATE VALVE
N.T.S.

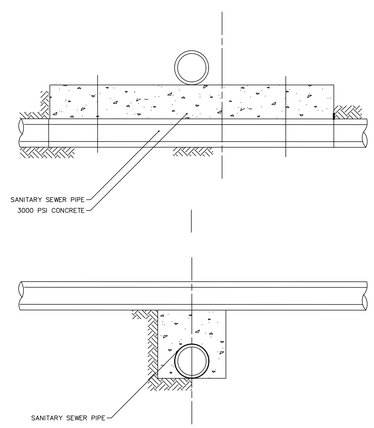


NOTES:
1. ALL TRENCHES GREATER THAN 5' DEEP MUST BE SHORED PER OSHA REQUIREMENTS.
2. PRIOR TO UTILITY INSTALLATION, SUBGRADE SHALL BE PROOF ROLLED WITH AT LEAST 6 OVERLAPPING PASSES OR A DOUBLE-DRUM 1 TON WALK-BEHIND VIBRATORY ROLLER.
3. SOFT AREAS IDENTIFIED DURING PROOF ROLLING SHALL BE REMOVED AND REPLACED WITH APPROVED STRUCTURE FILL OR LEAN CONCRETE.

6 WATER MAIN TRENCH
N.T.S.



7 WATER TRENCH
N.T.S.



NOTE:
1. ALL SANITARY PIPES SHALL BE ENCASED IN CONCRETE, WHEN THE VERTICAL DISTANCE BETWEEN PIPE CROSSINGS IS 18" OR LESS AND THE HORIZONTAL SEPARATION DISTANCE BETWEEN PIPES IS LESS THEN 10', ENCASEMENT SHALL BE EXTENDED FOR A DISTANCE OF 10' (20' TOTAL) FROM BOTH SIDES OF THE CENTERLINE OF THE PIPE OR UNTIL THE PIPE SEPARATION IS 10' HORIZONTAL, WHICH EVER IS LONGER.

8 CONCRETE ENCASEMENT FOR SANITARY SEWER
N.T.S.

DECISION DATE: _____

ENDORSEMENT DATE: _____

MEDWAY PLANNING & ECONOMIC DEVELOPMENT BOARD

DORE + WHITTIER
MASSACHUSETTS
260 MERRIMAC STREET BUILDING 7, 2ND FLOOR
NEWBURYPORT, MA 01950
P: (978) 499-2999

VERMONT
212 BATTERY STREET
BURLINGTON, VT 05401
P: (802) 863-1428

LANGAN
Langan Engineering and Environmental Services, LLC.
100 Cambridge Street, Suite 1310
Boston, MA 02114
T: 617.824.9100 F: 617.824.9101 www.langan.com

MEDWAY MUNICIPAL COMPLEX
120 MAIN STREET,
MEDWAY, MA 02053

PROJECT NUMBER: 151072201

SEAL AND SIGNATURE:

COMMONWEALTH OF MASSACHUSETTS JOHN D. PLATTE No. 39713 REGISTERED PROFESSIONAL ENGINEER

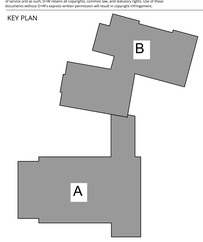
REVISIONS:

NO.	DATE	TITLE
1.	09/18/2026	PEER REVIEW COMMENT RESPONSE

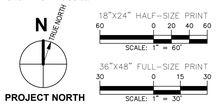
ISSUE TITLE AND DATE:
PERMIT DRAWINGS
7/20/2026

COPYRIGHT © 2023 by Dore & Whittier Architects, Inc. (D+W). These documents are D+W's instruments of service and shall remain the property of D+W whether the project for which they are made is executed or not. The reproduction, publication or use of these documents without D+W's express written permission will result in copyright infringement.

KEY PLAN



ORIENTATION AND SCALE:



SHEET TITLE:

UTILITY DETAILS

SHEET NUMBER:

CU501



SITE LIGHTING SCHEDULE

SYMBOL	KEY	QTY.	FIXTURE MANUFACTURER	FIXTURE MODEL	FIXTURE DESCRIPTION	FIXTURE MOUNTING HEIGHT	LAMP	COLOR TEMPERATURE	OPTICS	LUMENS	LLF	FIXTURE CATALOGUE NO.	POLE MANUFACTURER	POLE DESCRIPTION	POLE LENGTH	POLE CATALOGUE NO.	REMARKS
	A	13	STERNBERG	E450 LED	POST-TOP FIXTURE; COLOR: BLACK	16'-0"	70W LED	3000K	TYPE V	6,200	0.90	E450ED-16L-30T5-MDL012-FL-VOLTS-BK	STERNBERG	18" DIA. FLUTED POLE	16'-0"	6200 OXFORD (62)-BK	MOUNTED TO FLUSH CONCRETE BASE
	A*	2	STERNBERG	E450 LED	POST-TOP FIXTURE; COLOR: BLACK	16'-0"	70W LED	3000K	TYPE V	6,200	0.90	E450ED-16L-30T5-MDL012-FL-VOLTS-BK	STERNBERG	18" DIA. FLUTED POLE	14'-0"	6200 OXFORD (62)-BK	MOUNTED ON 2' CONCRETE FOOTING WITH ANCHOR BOLT COVER
	B	18	STERNBERG	E450 LED	POST-TOP FIXTURE; COLOR: BLACK	16'-0"	70W LED	3000K	TYPE III	6,200	0.90	E450LED-16L30T3-MDL012-FL-VOLTS-BK	STERNBERG	18" DIA. FLUTED POLE	16'-0"	6200 OXFORD (62)-BK	MOUNTED TO FLUSH CONCRETE BASE
	C	4	STERNBERG	1914 LED	ARM-MOUNTED FIXTURE COLOR: BLACK	14'-0"	35W LED	3000K	TYPE III	4,594	0.90	PER MEDWAY TOWN STANDARD	–	–	PER MEDWAY TOWN STANDARD	–	MOUNTED TO FLUSH CONCRETE BASE
	D	18	CIP LIGHTING	TEEMU 508A	BOLLARD FIXTURE	3'-0"	20W LED	3000K	WIDE	1,450	0.90	TEEMU-508A-MCA125A-VOLTS-BK	–	–	–	–	–
	E	60	FX LUMINAIRE	PO WALL LIGHT	SITE WALL-MOUNTED FIXTURE; COLOR: BLACK	10"	2W LED	3000K	–	100	0.90	FN1-24LU-3K-VOLTS-BK	–	–	–	–	–
	F	4	TARGETTI	KEPLERO GIMBAL HP	FLAGPOLE FIXTURE; COLOR: BRUSHED NATURAL	–	16W LED	3000K	SPOT NSP 5°	1,407	–	PL41GHPNSL030-1DU2325-1DU2394-1DU2530	–	–	–	–	

NOTES:
1. REFER TO ELECTRICAL DRAWINGS FOR SITE LIGHTING VOLTAGES

STATISTICS

DESCRIPTION	AVG.	MAX.	MIN.	MAX./MIN.	AVG./MIN.
PARKING & DRIVE	1.41fc	13.9fc	0.2fc	69.5:1	7.0:1
FIRE STATION SOUTHWEST DRIVE	2.0fc	7.3fc	0.2fc	36.5:1	10.0:1
BUILDING PERIMETER – EAST	2.4fc	11.6fc	0.1fc	116:1	23.7:1
BUILDING PERIMETER – WEST	1.4fc	12.3fc	0.1fc	123.0:1	14.0:1
EXTENDED PATHS – WEST	1.3fc	3.6fc	0.1	36.0:1	13.0:1

DECISION DATE: ______

ENDORSEMENT DATE: ______

MEDWAY PLANNING & ECONOMIC DEVELOPMENT BOARD

DORE + WHITTIER
MASSACHUSETTS
260 MERRIMAC STREET BUILDING 7, 2ND FLOOR
NEWBURYPORT, MA 01950
P: (978) 499-2999

VERMONT
212 BATTERY STREET
BURLINGTON, VT 05401
P: (802) 863-1428

LANGAN
Langan Engineering and Environmental Services, LLC.
100 Cambridge Street, Suite 1310
Boston, MA 02114
T: 617.824.9100 F: 617.824.9101 www.langan.com

MEDWAY MUNICIPAL COMPLEX
120 MAIN STREET, MEDWAY, MA 02053

PROJECT NUMBER: 151072201

SEAL AND SIGNATURE:
MASSACHUSETTS MICHAEL S. NOWICKI No. 1540 REGISTERED LANDSCAPE ARCHITECT

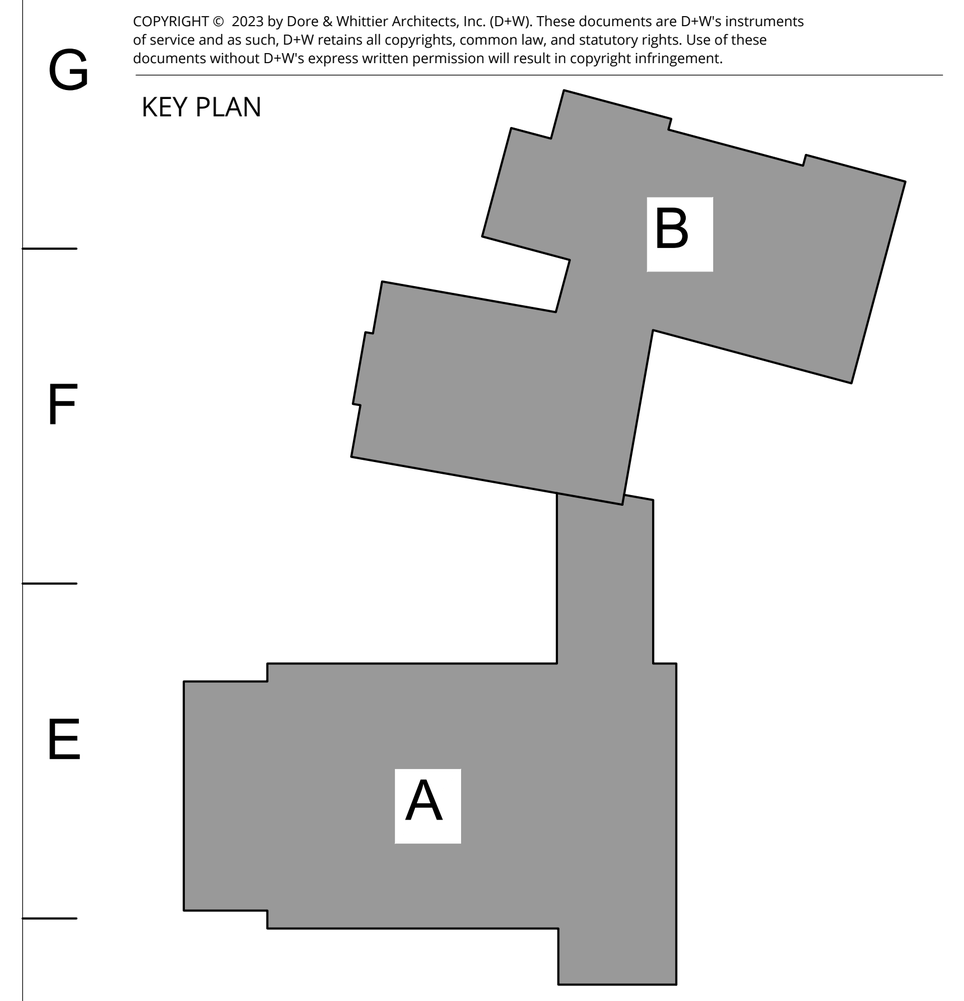
REVISIONS:

NO.	DATE	TITLE
1	09/18/2026	PEER REVIEW COMMENT RESPONSE

ISSUE TITLE AND DATE:
PERMIT DRAWINGS
7/20/2026

COPYRIGHT © 2023 by Dore & Whittier Architects, Inc. (D+W). These documents are D+W's instruments of service and as such, D+W retains all copyrights, common law, and statutory rights. Use of these documents without D+W's express written permission will result in copyright infringement.

KEY PLAN



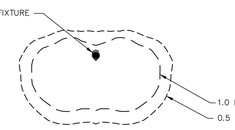
ORIENTATION AND SCALE:
N TRUE NORTH
PROJECT NORTH
18"X24" HALF-SIZE PRINT 60 0 20 40 60 SCALE: 1" = 60'
36"X48" FULL-SIZE PRINT 30 0 15 30 SCALE: 1" = 30'

SHEET TITLE:
SITE LIGHTING PLAN

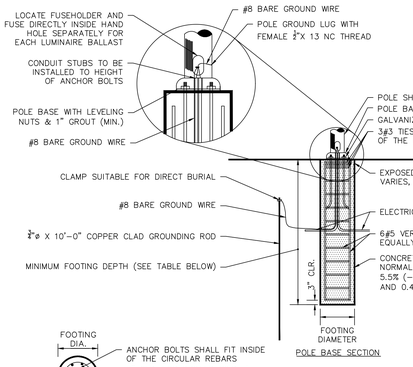
SHEET NUMBER:
LL101

GENERAL LIGHTING NOTES:

1. POINT-BY-POINT CALCULATIONS PROVIDED WITHIN HAVE BEEN PREPARED IN ACCORDANCE TO IESNA STANDARDS AND IN CONSIDERATION OF THE VARIABLES WITHIN THESE NOTES AND SITE LIGHTING SCHEDULE. THE VALUES SHOWN ON THE PLANS ARE NOT AN INDICATION OF THE INITIAL LIGHT INTENSITIES OF THE LAMPS. THESE VALUES ARE AN APPROXIMATION OF THE MAINTAINED INTENSITIES DELIVERED TO THE GROUND PLANE USING INDUSTRY ACCEPTABLE LIGHT LOSS FACTORS (LLF) WHICH COVER LAMP DEGRADATION AND NATURAL BUILDUP ON THE FIXTURE LENS. THE LIGHTING PLAN IS DESIGNED WITH AN INDUSTRY ACCEPTABLE LLF TO ENSURE ADEQUATE LIGHT INTENSITIES OVER YEARS OF USE AND WEAR. MINOR VARIATIONS IN TOPOGRAPHY, PHYSICAL OBSTRUCTIONS, AMBIENT OR ADJACENT LIGHT SOURCES AND/OR OTHER POTENTIAL IMPACTS HAVE NOT BEEN INCLUDED IN THESE CALCULATIONS. THEREFORE, AS-BUILT LIGHT INTENSITIES MAY VARY, IN EITHER DIRECTION, FROM WHAT IS EXPLICITLY PORTRAYED WITHIN THESE DRAWINGS.
2. PROVIDE A CONCRETE BASE FOR EACH LIGHT POLE AT THE LOCATIONS INDICATED ON THE CONSTRUCTION DRAWINGS AND IN ACCORDANCE WITH PROJECT PLANS AND SPECIFICATIONS RELATING DIRECTLY TO CAST-IN-PLACE CONCRETE.
3. CONTRACTOR TO COORDINATE INSTALLATION OF UNDERGROUND FEEDER CABLE FOR EXTERIOR LIGHTING WITH EXISTING AND PROPOSED UTILITIES, SITE DRAINAGE SYSTEMS, AND PAVING. CONTRACTOR SHALL PROMPTLY NOTIFY THE OWNER'S REPRESENTATIVE SHOULD ANY UTILITIES, NOT SHOWN ON THE PLANS, BE FOUND DURING EXCAVATIONS.
4. CONTRACTOR TO OPERATE EACH LUMINAIRE AFTER INSTALLATION AND CONNECTION. INSPECT FOR IMPROPER CONNECTIONS AND OPERATION.
5. AIM AND ADJUST ALL LUMINAIRES TO PROVIDE ILLUMINATION LEVELS AND DISTRIBUTION AS INDICATED ON THE CONSTRUCTION DRAWINGS OR AS DIRECTED BY THE LANDSCAPE ARCHITECT AND/OR OWNER.
6. CONTRACTOR TO COORDINATE INSTALLATION OF ALL THE WALL MOUNTED FIXTURES AND ELECTRICAL CONNECTIONS TO SITE STRUCTURE(S) WITH BUILDING MEP, ARCHITECT, AND/OR OWNER.
7. INSTALLATION OF ALL LIGHTING FIXTURES, POLES, FOOTINGS, AND FEEDER CABLE TO BE COORDINATED WITH ALL SITE WORK TRADES TO AVOID CONFLICT WITH FINISHED AND PROPOSED WORK.
8. POINT SPACING ON PLACE OF CALCULATION IS 10 FT. LEFT TO RIGHT AND 10 FT. TOP TO BOTTOM. POINT BY POINT CALCULATIONS ARE BASED ON A 0.90 MAINTENANCE FACTOR.
9. POINT-BY-POINT CALCULATIONS PROVIDED WITHIN HAVE BEEN PREPARED IN ACCORDANCE TO IESNA STANDARDS AND IN CONSIDERATION OF THE VARIABLES WITHIN THESE NOTES AND SITE LIGHTING SCHEDULE. THE VALUES REPRESENTED ON THE PLANS PRESENT AN APPROXIMATION OF THE MAINTAINED LIGHT LEVELS DELIVERED TO THE GROUND PLANE. MINOR VARIATIONS IN TOPOGRAPHY, PHYSICAL OBSTRUCTIONS, LAMP DEGRADATION, AMBIENT OR ADJACENT LIGHT SOURCES AND/OR OTHER POTENTIAL IMPACTS HAVE NOT BEEN INCLUDED IN THESE CALCULATIONS. GIVEN THIS, AS-BUILT VALUES MAY VARY, GREATER THAN OR LESS THAN, WHAT IS EXPLICITLY PORTRAYED WITHIN THESE DRAWINGS
10. ALL SITE LIGHTING RELATED WORK AND MATERIALS SHALL COMPLY WITH CITY, COUNTY, AND OTHER APPLICABLE GOVERNING AUTHORITY REQUIREMENTS.
11. SITE ELECTRICAL CONTRACTOR TO COORDINATE LOCATION OF EASEMENTS, UNDERGROUND UTILITIES AND DRAINAGE BEFORE DRILLING POLE BASES.
12. SITE ELECTRICAL CONTRACTOR TO COORDINATE POWER SOURCE WITH LIGHT FIXTURES TO INSURE ALL SITE LIGHTING IS OPERATING EFFECTIVELY, EFFICIENTLY AND SAFELY.
13. SITE ELECTRICAL CONTRACTOR SHALL CONFIRM THAT LIGHT FIXTURES MATCH SPECIFICATIONS ON THE PLANS.
14. REFER TO ELECTRIFICATION PLAN FOR PROVIDING ADEQUATE POWER FOR SITE LIGHTING.
15. SITE ELECTRICAL CONTRACTOR SHALL EXAMINE AND VERIFY THAT SOIL CONDITIONS ARE SUITABLE TO SUPPORT LOADS EXERTED UPON THE FOUNDATIONS DURING EXCAVATION. CONTRACTOR SHALL NOTIFY ENGINEER OF ANY UNSATISFACTORY CONDITIONS.
16. POLE FOUNDATIONS SHALL NOT BE POURED IF FREE STANDING WATER IS PRESENT IN EXCAVATED AREA.
17. ELECTRICIAN AND INSTALLATION OF WALL MOUNTED FIXTURES SHALL BE COORDINATED WITH THE ARCHITECTURAL, STRUCTURAL, AND SITE DRAWINGS FOR SAFETY AND TO PROVEN EXPOSED WIRING.
18. LIGHTING SUBSTITUTION REQUIREMENTS:
    ALL LIGHTING SUBSTITUTIONS MUST BE MADE WITHIN 14 DAYS PRIOR TO THE BID DATE TO PROVIDE AMPLE TIME FOR REVIEW AND TO ISSUE AN ADDENDUM INCORPORATING THE SUBSTITUTION WITH THE FOLLOWING REQUIREMENTS:
    A. ANY SUBSTITUTION TO LIGHTING FIXTURES, POLES, ETC. MUST BE APPROVED BY THE OWNER, ENGINEER AND TENANTS. ANY COST ASSOCIATED WITH REVIEW AND/OR APPROVAL OF THE SUBSTITUTIONS SHALL BE ENTIRELY BORNE BY THE CONTRACTOR
    B. COMPUTER PREPARED PHOTOMETRIC LAYOUT OF THE PROPOSED LIGHTED AREA WHICH INDICATES, BY ISOFOOTCANDLE, THE SYSTEM'S PERFORMANCE.
    C. A PHOTOMETRIC REPORT FROM A NATIONAL INDEPENDENT TESTING LABORATORY WITH REPORT NUMBER, DATE, FIXTURE CATALOG NUMBER, LUMINAIRE AND LAMP SPECIFICATIONS; IES CALCULATIONS, CANDLEPOWER TABULATIONS, ZONE LUMEN SUMMARY, ISOLUX PLOT, AND CATALOGUE CUTS. CATALOGUE CUTS MUST IDENTIFY, BUT NOT LIMITED TO, OPTICS, LAMP TYPE, DISTRIBUTION TYPE, REFLECTOR, LENS, BALLASTS, WATTAGE, VOLTAGE, FINISH AND HOUSING DESCRIPTION.
    D. POLE MANUFACTURER AASHTO CALCULATIONS INDICATING THE POLE AND ANCHOR BOLTS BEING SUBMITTED ARE CAPABLE OF SUPPORTING THE POLE AND FIXTURE SYSTEMS BEING UTILIZED IN ACCORDANCE WITH THE CONTRACT DOCUMENTS.
    E. THE UNDERWRITERS LABORATORY LISTING AND FILE NUMBER FOR THE SPECIFIC FIXTURE(S) TO BE UTILIZED.
    F. A COLOR PHOTOGRAPH THAT CLEARLY SHOWS THE REPLACEMENT FIXTURE POLE MOUNTED, THE FIXTURE'S COLOR, FINISH, AND PHYSICAL CHARACTERISTICS.
19. PHOTOMETRIC LIGHTING TEMPLATE:

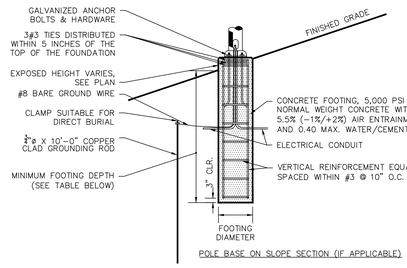


NOTE: THE PHOTOMETRIC TEMPLATE REPRESENTS LIGHT THROW FOR EACH INDIVIDUAL FIXTURE. IT DOES NOT REPRESENT LIGHT COMING FROM OTHER SOURCES.



NOTES:

EXPOSED HEIGHT OF POLE BASE (H) SHALL BE MEASURED ON THE UPHILL SIDE OF A SLOPE. FOOTING DEPTH (D) SHALL BE MEASURED ON THE DOWNHILL SIDE OF A SLOPE. AN ADDITIONAL VARIABLE HEIGHT (V) WILL BE BASED ON THE SLOPE ON WHICH THE POLE BASE IS LOCATED. CONTRACTOR TO CALCULATE FULL LENGTH OF EACH POLE BASE REQUIRED ON SLOPES (H+D+V = TOTAL BASE LENGTH)



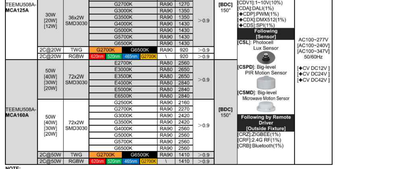
NOTES:

1. SHAFT CAP, ARMS, BASE FLANGE, ANCHOR BOLTS, LEVELING NUTS, CONNECTION HARDWARE, BOLT COVERS, HANDHOLE COVER, AND BOLT CIRCLE TEMPLATE SHALL BE FURNISHED BY POLE MANUFACTURER.
2. EACH STANDARD TO BE PROTECTED AGAINST LIGHTNING WITH AN INTERCONNECTED GROUND ROD. THIS ROD SHALL BE BONDED PER SECTION NUMBER 250-86, N.E.C.
3. CONCRETE WORK SHALL COMPLY WITH THE REQUIREMENT OF ACI 318. CAST-IN-PLACE SHALL HAVE UNCONFINED COMPRESSIVE STRENGTH OF AT LEAST 5,000 PSI AT 28-DAYS. DEFORMED REINFORCEMENT BARS SHALL CONFORM TO ASTM A615, GRADE 60.
4. CONTRACTOR TO ENSURE CONCRETE POLE BASES ARE POURED / PLACED ABSOLUTELY VERTICAL & LEVEL.
5. IF POLE BASE IS CAST-IN-PLACE, POLE BASE SHALL BE ONE CONTINUOUS POUR. EXPOSED PORTION OF BASE SHALL BE HAND-RUBBED SMOOTH.
6. CONTRACTOR TO COMPACT SUBGRADE AROUND POLE BASE PER EARTHWORK SPECIFICATIONS / GEOTECH REPORT.
7. THE INFORMATION ILLUSTRATED IN THE LIGHT POLE FOUNDATION DETAIL HAS BEEN PROVIDED FOR GENERAL REFERENCE AND PRELIMINARY COST ESTIMATE PURPOSES. LIGHT POLE FOUNDATIONS SHOULD BE DESIGNED AND DETAILED BY A LICENSED STRUCTURAL ENGINEER BASED ON EXISTING SOIL CONDITIONS, LOCAL DESIGN STANDARDS AND MANUFACTURERS RECOMMENDATIONS.
8. CONTRACTOR TO CONFIRM GROUNDING DESIGN WITH MEP.

FIXTURE TYPE	MOUNTING HEIGHT	FOOTING DEPTH	FOOTING DIAMETER	EXPOSED HEIGHT "H"	VERTICAL REINFORCEMENT
A, B, C	16'-0"	4'-0"	2'-0"	1" MAX	6#5 BARS
A*	16'-0"	4'-0"	2'-0"	2'-0"	6#5 BARS

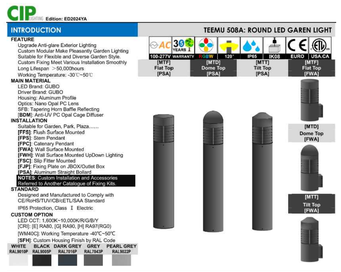
1 FIXTURE BASE - TYPES A, B & C

N.T.S



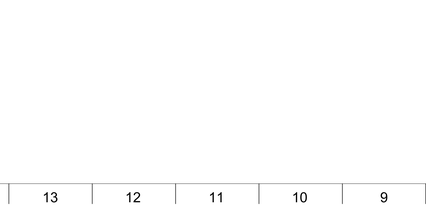
3 POST-TOP FIXTURE

N.T.S



6 BOLLARD FIXTURE

N.T.S



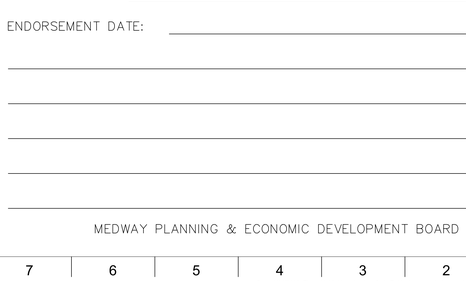
4 FLAGPOLE FIXTURE

N.T.S



2 ARM-MOUNTED FIXTURE

N.T.S



5 SITE WALL MOUNTED SCONCE

N.T.S

DECISION DATE: _____

ENDORSEMENT DATE: _____

MEDWAY PLANNING & ECONOMIC DEVELOPMENT BOARD

DORE + WHITTIER
MASSACHUSETTS
260 MERRIMAC STREET BUILDING 7, 2ND FLOOR
NEWBURYPORT, MA. 01950
P: (978) 499-2999

VERMONT
212 BATTERY STREET
BURLINGTON, VT 05401
P: (802) 863-1428

LANGAN
Langan Engineering and Environmental Services, LLC.
100 Cambridge Street, Suite 1310
Boston, MA 02114
T: 617.824.9100 F: 617.824.9101 www.langan.com

MEDWAY MUNICIPAL COMPLEX
120 MAIN STREET,
MEDWAY, MA 02053

PROJECT NUMBER: 151072201

SEAL AND SIGNATURE:

COMMONWEALTH OF MASSACHUSETTS MICHAEL S. NOWICKI No. 1540 REGISTERED LANDSCAPE ARCHITECT

REVISIONS:

NO.	DATE	TITLE
1	09/18/2026	PEER REVIEW COMMENT RESPONSE

ISSUE TITLE AND DATE:
PERMIT DRAWINGS
7/20/2026

COPYRIGHT © 2023 by Dore & Whittier Architects, Inc. (D+W). These documents are D+W's instruments of service and as such, D+W retains all copyrights, common law, and statutory rights. Use of these documents without D+W's express written permission will result in copyright infringement.

KEY PLAN



ORIENTATION AND SCALE:

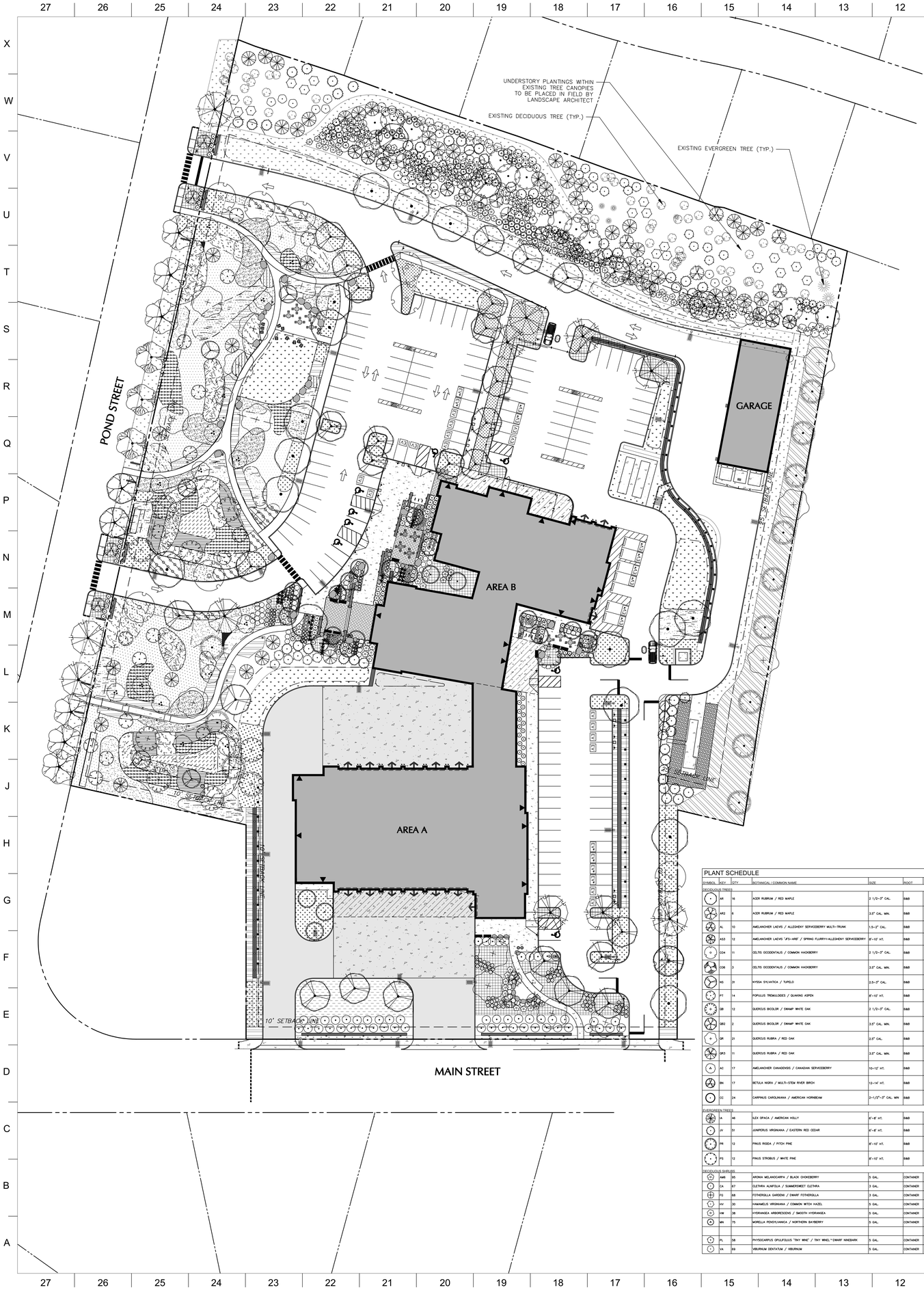
SHEET TITLE:

SITE LIGHTING DETAILS

SHEET NUMBER:

LL501

Date: 9/21/2026 Time: 03:05 User: hschur Style Table: Langan.stb Layout: LL501 Document Code: 151072201-0301-LL501-0102



DECISION DATE: _____

ENDORSEMENT DATE: _____

MEDWAY PLANNING & ECONOMIC DEVELOPMENT BOARD

TOWN OF MEDWAY, MA ZONING CODE COMPLIANCE CHART

REGULATION SECTION	REQUIRED/ PERMITTED	PROVIDED/ PROPOSED	COMPLIANCE
6.1	15% MINIMUM OPEN SPACE, 50% OF OPEN SPACE MUST BE AMENITY SPACE (LAWN, PLANTING AREA, PLAZA, ANY NON-PARKING NON-BUILDING AREA)	±60% OPEN SPACE	COMPLIES
7.1.2E	STANDARDS FOR THE CONTROL OF GLARE AND LIGHT TRESPASS: FOOT-CANDLE READINGS AT PROPERTY LINES BETWEEN RESIDENTIAL AND NON-RESIDENTIAL PROPERTIES SHALL NOT EXCEED 0.01 FOOT CANDLES AT ANY ELEVATION. ANY OUTDOOR LUMINAIRE SUBJECT TO THESE PROVISIONS WITH A LAMP OR LAMPS RATED AT A TOTAL OF MORE THAN 2,000 LUMENS SHALL BE FULLY SHIELDED AND SHALL NOT EMIT ANY DIRECT LIGHT ABOVE A HORIZONTAL PLANE PASSING THROUGH THE LOWEST PART OF THE LIGHT-EMITTING LUMINARY.	–	COMPLIES
7.2.4D	LANDSCAPING IS REQUIRED AROUND THE BASE OF ALL FREESTANDING SIGNS AND A LANDSCAPING PLAN SHALL BE PROVIDED WITH THE SIGN PERMIT APPLICATION. THE MINIMUM LANDSCAPED AREA SHALL EXTEND AT LEAST THREE FEET BEYOND ALL SIGN FACES OR SUPPORTING STRUCTURES IN ALL DIRECTIONS.	–	COMPLIES
10.2D	IN PARKING AREAS CONTAINING THIRTY OR MORE SPACES, A MINIMUM OF ONE DECIDUOUS TREE AND TWO SHRUBS EXCLUSIVE OF ANY REQUIRED PERIMETER PLANTINGS MUST BE PLANTED FOR EVERY THREE-THOUSAND SQUARE FEET OF PARKING AREAS. WHEN PLANTED, DECIDUOUS TREES MUST BE A MINIMUM HEIGHT OF TEN FEET AND/OR TWO AND ONE HALF INCHES IN CALIPER. PLANTING AREAS MUST EACH CONTAIN NOT LESS THAN FIFTY SQUARE FEET OF UNPAVED SOIL AREA. TREES AND SOIL PLOTS SHALL BE SO LOCATED AS TO PROVIDE VISUAL RELIEF AND WIND INTERRUPTION WITHIN THE PARKING AREA, AND TO ASSURE SAFE PATTERNS OF INTERNAL CIRCULATION.	–	COMPLIES
10.2E2	IN THE BUILDING FRONTAGE ZONE BETWEEN THE MAIN STREET RIGHT-OF-WAY LINE AND THE FRONT FACADE OF THE BUILDING, STREETSCAPE TREATMENTS SHOULD BE COORDINATED AND COMPLIMENTARY TO THE PUBLIC SIDEWALK AND STREETSCAPE TREATMENTS WITHIN RIGHT-OF-WAY.	–	COMPLIES
10.2E2B	DECIDUOUS STREET TREES MAY BE INSTALLED IN THE BUILDING FRONTAGE ZONE THAT COMPLIMENT STREET TREES WITHIN THE STREET RIGHT-OF-WAY. TREES SHALL BE A MINIMUM OF THREE AND ONE-HALF INCH CALIPER AT LEAST FOUR FEET ABOVE GRADE AND OF NATIVE SPECIES COMMON TO THE AREA. THEY SHOULD BE PLANTED IN ACCORDANCE WITH THE RECOMMENDED STANDARDS SET FORTH BELOW IN FIGURE 1. THE TREES SHOULD BE DROUGHT AND SALT TOLERANT. THEY SHOULD BE REGULARLY TRIMMED TO PROVIDE CLEAR VISIBILITY INTO THE SITE FROM THE STREET AND PROVIDE SHADE OVER THE WALKWAY.	–	COMPLIES
10.2.E2C	LOW LYING AND LOW MAINTENANCE GRASSES, SHRUBS, BUSHES, FLOWERS, AND SIMILAR VEGETATIVE GROUND COVER MAY BE PLANTED ADJACENT TO THE STREET RIGHT-OF-WAY LINE. ALL GROUND COVER MUST BE MAINTAINED AT A HEIGHT OF NO MORE THAN THIRTY INCHES TO AVOID BLOCKING VISIBILITY FOR DRIVERS ENTERING OR EXITING THE SITE.	–	COMPLIES
10.2E3	TRANSITIONAL BUFFERS ARE REQUIRED BETWEEN PROPERTIES IN THE CENTRAL BUSINESS DISTRICT AND ABUTTING PROPERTIES IN RESIDENTIAL DISTRICTS TO CREATE A COMPATIBLE TRANSITION WITH THE SURROUNDING NEIGHBORHOODS. TRANSITIONAL BUFFERS MAY INCLUDE ANY COMBINATION OF NATURAL OR LANDSCAPED SCREENING AND FENCING THAT PROVIDES AN OPAQUE VISUAL BARRIER TO A MINIMUM HEIGHT OF EIGHT FEET ABOVE THE GROUND INSTALLED ALONG THE PROPERTY BOUNDARY LINE. WHERE TRANSITIONAL BUFFERS ARE REQUIRED, ALL BUILDINGS, ACCESSORY STRUCTURES, AND LOADING AREAS SHALL BE SET BACK A MINIMUM OF SEVENTY-FIVE FEET, AND PARKING SHALL BE SET BACK A MINIMUM OF FIFTY FEET, FROM THE PROPERTY LINE WHERE THE TRANSITIONAL BUFFER IS TO BE INSTALLED.	–	COMPLIES

TOWN OF MEDWAY, MA SITE PLAN TREE PRESERVATION COMPLIANCE CHART

REGULATION SECTION	REQUIRED/ PERMITTED	PROVIDED/ PROPOSED	COMPLIANCE
207-19.G	TREE REPLACEMENT - ALL HEALTHY, NON-INVASIVE HARDWOOD TREES THROUGHOUT THE SITE AND ALL HEALTHY, NON-INVASIVE TREES LOCATED WITHIN THE STANDARD ZONING SETBACKS, WHICH ARE FIFTEEN INCHES OR MORE IN DIAMETER AS MEASURED FOUR AND ONE-HALF FEET ABOVE FINISH GRADE (DBH) THAT ARE TO BE REMOVED FROM THE SITE OR ARE DESTROYED DURING CONSTRUCTION SHALL REQUIRE MITIGATION BY SATISFYING ONE OR A COMBINATION OF THE FOLLOWING PROVISIONS WHICH SHALL BE APPROVED BY THE BOARD, SPECIFIED IN THE SITE PLAN DECISION, AND SHOWN ON THE SITE PLAN. 1. REMOVED AND/OR DESTROYED TREES ARE TO BE REPLACED BY PLANTING NEW NURSERY GRADE TREES AS FOLLOWS: FOR EACH DBH INCH OF TREE(S) REMOVED OR DESTROYED, AT LEAST ½-INCH CALIPER OF NEW TREE(S) MUST BE PLANTED. FOR EXAMPLE, IF A TOTAL OF 40 DBH CALIPER INCHES OF TREES ARE REMOVED OR DESTROYED, THEN 20 INCHES OF NEW TREE CALIPER MUST BE PLANTED (EIGHT 2½ INCH CALIPER TREES) A. REPLACEMENT TREES SHALL BE OF VARIETIES SPECIFIED IN S. 207-19 E. IF EVERGREENS ARE USED AS REPLACEMENT TREES, THEY SHALL BE A MINIMUM OF 6 FEET IN HEIGHT. NEITHER LOW GROWING EVERGREENS NOR SHRUBS SHALL BE ACCEPTED AS REPLACEMENT TREES. B. REPLACEMENT TREES SHALL BE PLACED ON THE DEVELOPMENT SITE, ON ADJACENT PROPERTY WITH PERMISSION OF THE ABUTTING PROPERTY OWNER OR MAY BE PLANTED ON OTHER PROPERTY IN MEDWAY OWNED BY THE APPLICANT. C. A REPLACEMENT TREE SHALL BE REQUIRED TO SURVIVE FOR A MINIMUM OF ONE YEAR FROM THE DATE IT IS PLANTED. D. PLANTING OF REPLACEMENT TREES DOES NOT FULFILL THE REQUIREMENTS FOR SITE AND PARKING LOT LANDSCAPING SPECIFIED IN S. 207-19.	TOTAL REPLACEMENT CALIPER REQUIRED: 388 INCHES TOTAL PROPOSED: 475+ INCHES PROPOSED CALIPER TOTAL INCLUDES ONLY DECIDUOUS TREES 2.5" CALIPER MINIMUM AND EVERGREEN TREES ABOVE 6' AT THE FOLLOWING CONVERSION RATES: 6–8' HT = 1.5" CAL 8–10' HG = 2" CAL	COMPLIES

PLANT SCHEDULE

SYMBOL	KEY	QTY	BOTANICAL / COMMON NAME	SIZE	ROOT
DECIDUOUS TREES					
	AR	16	ACER RUBRUM / RED MAPLE	2 1/2–3" CAL.	B&B
	ARO	8	ACER RUBRUM / RED MAPLE	3.5" CAL. MIN.	B&B
	AL	10	AMELANCHIER LAEVIS / ALLEGHENY SERVICEBERRY MULTI-TRUNK	1.5–2" CAL.	B&B
	AS3	12	AMELANCHIER LAEVIS "JFS–ARB" / SPRING FLURRY® ALLEGHENY SERVICEBERRY	6'–10' HT.	B&B
	CO4	11	CELTIS OCCIDENTALIS / COMMON HACKBERRY	2 1/2–3" CAL.	B&B
	CO6	3	CELTIS OCCIDENTALIS / COMMON HACKBERRY	3.5" CAL. MIN.	B&B
	NS	31	NYSSA SYLVATICA / TUPELO	2.5–3" CAL.	B&B
	PT	14	POPULUS TREMULOIDES / QUAKING ASPEN	8'–10' HT.	B&B
	QB	12	QUERCUS BICOLOR / SWAMP WHITE OAK	2 1/2–3" CAL.	B&B
	QB2	2	QUERCUS BICOLOR / SWAMP WHITE OAK	3.5" CAL. MIN.	B&B
	QR	21	QUERCUS RUBRA / RED OAK	2.5" CAL.	B&B
	QR3	11	QUERCUS RUBRA / RED OAK	3.5" CAL. MIN.	B&B
	AC	17	AMELANCHIER CANADENSIS / CANADIAN SERVICEBERRY	10–12" HT.	B&B
	BN	17	BETULA NIGRA / MULTI-STEM RIVER BIRCH	12–14" HT.	B&B
	CC	24	CARPINUS CAROLINIANA / AMERICAN HORNBEAM	2–1/2"–3" CAL. MIN	B&B
EVERGREEN TREES					
	IA	46	ILEX OPACA / AMERICAN HOLLY	6'–8' HT.	B&B
	JV	51	JUNIPERUS VIRGINIANA / EASTERN RED CEDAR	6'–8' HT.	B&B
	PR	12	PINUS RIGIDA / PITCH PINE	6'–10' HT.	B&B
	PS	12	PINUS STROBUS / WHITE PINE	8'–10' HT.	B&B
DECIDUOUS SHRUBS					
	AME	95	ARONIA MELANOCARPA / BLACK CHOKEBERRY	3 GAL.	CONTAINER
	CA	67	CLETHRA ALNIFOLIA / SUMMERSWEET CLETHRA	3 GAL.	CONTAINER
	FG	68	FOTHERGILLA GARDENII / DWARF FOTHERGILLA	3 GAL.	CONTAINER
	HV	30	HAMAMELIS VIRGINIANA / COMMON WITCH HAZEL	3 GAL.	CONTAINER
	HW	38	HYDRANGEA ARBORESCENS / SMOOTH HYDRANGEA	3 GAL.	CONTAINER
	MA	75	MORELLA PENSYLVANICA / NORTHERN BAYBERRY	3 GAL.	CONTAINER
	PL	58	PHYSOCARPUS OPULIFOLIUS "TINY WINE" / TINY WINE® DWARF NINEBARK	3 GAL.	CONTAINER
	VA	88	VIBURNUM DENTATUM / VIBURNUM	3 GAL.	CONTAINER

SYMBOL	KEY	QTY	BOTANICAL / COMMON NAME	SIZE	ROOT
EVERGREEN SHRUBS					
	IGS	100	ILEX GLABRA "SHAMROCK" / SHAMROCK INKBERRY HOLLY	3 GAL.	CONTAINER
	RM	110	RHODODENDRON MAXIMUM / ROSEBAY RHODODENDRON	3 GAL.	CONTAINER
	IG3	118	ILEX GLABRA / INKBERRY HOLLY	3 GAL.	CONTAINER
ORNAMENTAL GRASS					
	SH3	50	SPOROBOLUS HETEROLEPIS / PRAIRIE DROPSEED	1 GAL.	CONTAINER
PERENNIALS					
	BA	62	BAPTISIA AUSTRALIS / BLUE WILD INDIGO	1 GAL.	CONTAINER
	EP2	48	ECHINACEA PURPUREA / CONEFLOWER	1 GAL.	CONTAINER
	PD	38	PENSTEMON DIGITALIS / BEARDTONGUE	1 GAL.	CONTAINER
	RH	51	RUDBECKIA HIRTA / BLACK-EYED SUSAN	1 GAL.	CONTAINER
SYMBOL	KEY	QTY	BOTANICAL / COMMON NAME	SIZE	ROOT SPACING
SHRUB AREAS					
	AM4	76	ARONIA MELANOCARPA / BLACK CHOKEBERRY	3 GAL.	CONTAINER 5'-0" o.c.
	CO7	56	CEPHALANTHUS OCCIDENTALIS / BUTTONBUSH	3 GAL.	CONTAINER 7'-0" o.c.
	CA4	65	CLETHRA ALNIFOLIA / SUMMERSWEET	3 GAL.	CONTAINER 5'-0" o.c.
	CO14	47	COMPTONIA PEREGRINA / SWEET FERN	3 GAL.	CONTAINER 5'-0" o.c.
	CK3	121	CORNUS SERICEA / RED TWIG DOGWOOD	3 GAL.	CONTAINER 7'-0" o.c.
	IG2	25	ILEX GLABRA / INKBERRY HOLLY	3 GAL.	CONTAINER 7'-0" o.c.
	IV3	37	ILEX VERTICILLATA / WINTERBERRY	3 GAL.	CONTAINER 7'-0" o.c.
	MA2	113	MORELLA PENSYLVANICA / NORTHERN BAYBERRY	3 GAL.	CONTAINER 6'-0" o.c.
	PL3	51	PHYSOCARPUS OPULIFOLIUS "LITTLE DEVIL" / LITTLE DEVIL™ DWARF NINEBARK	3 GAL.	CONTAINER 7'-0" o.c.
	RM2	50	RHODODENDRON MAXIMUM / ROSEBAY RHODODENDRON	3 GAL.	CONTAINER 8'-0" o.c.
	RA3	860	RHUS AROMATICA "GRO-LOW" / GRO-LOW FRAGRANT SUMAC	3 GAL.	CONTAINER 6'-0" o.c.
	VA3	76	VIBURNUM DENTATUM / VIBURNUM	3 GAL.	CONTAINER 9'-0" o.c.
GROUND COVERS					
	MB	148	MONARDA FISTULOSA / BERGAMOT	1 GAL.	CONTAINER 24" o.c.
	PA2	778	PYCNANTHEMUM ALBESCENS / MOUNTAIN MINT	1 GAL.	CONTAINER 18" o.c.
	VE	98	VERONICASTRUM VIRGINICUM / CULVER'S ROOT	1 GAL.	CONTAINER 24" o.c.
ORNAMENTAL GRASSES					
	CP	5,244	CAREX PENSYLVANICA / PENNSYLVANIA SEDGE	1 GAL.	CONTAINER 18" o.c.
	SO3	5,813	SCHIZACHYRIUM SCOPARIUM / LITTLE BLUESTEM	1 GAL.	CONTAINER 18" o.c.
	SH	1,200	SPOROBOLUS HETEROLEPIS / PRAIRIE DROPSEED	1 GAL.	CONTAINER 24" o.c.
SEED MIX					
	NS2	10,060 SF 13.06 LBS	NATIVE STEEP SLOPE MIX W/ANNUAL RYEGRASS / ERNST SEEDS	---	---
	NM	31,998 SF 190 LBS	NO MOW LAWN SEED MIX / PRAIRIE NURSERY	---	---
	RB	1,201 SF 1.5 LBS	RETENTION BASIN FLOOR MIX -LOW MAINTENANCE / ERNST SEEDS	---	---
	WS	11,277 SF 10.36 LBS	WARM SEASON GRASS MIX / ERNST SEEDS	---	---

TOWN OF MEDWAY, MA TREE PRESERVATION BYLAW COMPLIANCE CHART

REGULATION SECTION	REQUIRED/ PERMITTED	PROVIDED/ PROPOSED	COMPLIANCE
31.2.1	THE REQUIREMENTS OF THIS BYLAW AND ALL APPLICABLE RULES AND REGULATIONS APPLY TO THE FOLLOWING: a. PROPOSED DEMOLITION OF EXISTING RESIDENTIAL OR NON-RESIDENTIAL STRUCTURES IF CONSTRUCTION INCLUDES REMOVAL OF TREES IN THE TREE PRESERVATION AREA. b. PROPOSED CONSTRUCTION ON A DEVELOPED LOT IF CONSTRUCTION INCLUDES REMOVAL OF TREES IN THE TREE PRESERVATION AREA. c. PROPOSED CONSTRUCTION OF ANY BUILDING OR STRUCTURE ON A LOT WITH NO RESIDENTIAL OR NON-RESIDENTIAL STRUCTURE ON IT. d. PROPOSED LOT CLEARING OF 75% OR MORE OF TREE CANOPY ON A VACANT LOT.	–	–
31.2.2	THE FOLLOWING ARE EXEMPT FROM THE REQUIREMENTS OF THIS BYLAW AND ALL APPLICABLE RULES AND REGULATIONS: A. PUBLIC SHADE TREES PURSUANT TO M.G.L. CHAPTER 87. B. EMERGENCY PROJECTS NECESSARY FOR PUBLIC SAFETY, HEALTH, AND WELFARE, AS DETERMINED BY THE PERMITTING AUTHORITIES. C. TREES SEVERELY DAMAGED AS THE DIRECT RESULT OF A NATURAL DISASTER. D. A PERIOD OF AN EMERGENCY SUCH AS A TORNADO, WINDSTORM, FLOOD, OR OTHER NATURAL DISASTER. E. TREES THAT ARE HAZARDOUS AS DETERMINED AND CONFIRMED IN WRITING BY A CERTIFIED ARBORIST OR THE TREE WARDEN. F. TREES CURRENTLY INFECTED BY A DISEASE OR INSECT INFESTATION OF A PERMANENT NATURE, AS DETERMINED AND CONFIRMED IN WRITING BY A CERTIFIED ARBORIST OR THE TREE WARDEN. G. NEW CONSTRUCTION (ONLY), THE CONSTRUCTION OF NEW DRIVEWAYS OR ENTRYWAYS TO THE PROPERTY; WIDTH OF DRIVEWAYS/ENTRYWAYS SHOULD FOLLOW THE PUBLIC SAFETY REQUIREMENTS OF FIRE AND POLICE REGULATIONS. THIS EXEMPTION DOES NOT INCLUDE CLEARING OF TREES OUTSIDE THE FOOTPRINT OF THE PROPOSED DRIVEWAY/ENTRYWAY AND SIGHTLINES TO THE LOT PROPOSED FOR DEVELOPMENT.	–	–
31.4.1	IN CONNECTION WITH ANY ACTIVITY REGULATED BY THIS BYLAW, SEE SECTION 31.3, NO PERSON SHALL REMOVE A PROTECTED TREE WITHIN A TREE PRESERVATION AREA WITHOUT FIRST APPLYING FOR AND RECEIVING A TREE REMOVAL PERMIT OR CERTIFICATE OF EXEMPTION IN ACCORDANCE WITH THIS BYLAW. NO BUILDING PERMIT OR LAND DISTURBANCE PERMIT SHALL BE ISSUED FOR ANY USE, SITE, CONSTRUCTION, OR STRUCTURAL ALTERATION THAT IS SUBJECT TO THIS BYLAW UNTIL THE ISSUANCE OF A TREE REMOVAL PERMIT BY THE PERMITTING AUTHORITY IF APPLICABLE TO THE PROJECT.	–	–
31.4.2	PROTECTION DURING DEMOLITION AND/OR CONSTRUCTION: EACH PROTECTED TREE TO BE RETAINED ON THE PROPERTY SHALL BE SHIELDED BY THE ESTABLISHMENT OF A FENCED OFF TREE PRESERVATION AREA. THE TREE PRESERVATION AREA SHALL BE DELINEATED ON THE SUBMITTED TREE PROTECTION AND MITIGATION PLAN, SHALL BE INSTALLED PRIOR TO ANY DEMOLITION OR SITE WORK, AND SHALL REMAIN IN PLACE UNTIL WORK IS COMPLETED ON THE PROPERTY, EXCLUDING FINAL LANDSCAPING..	–	COMPLIES
31.4.3	MITIGATION: THE REMOVAL OF A PROTECTED TREE(S) FROM A PROPERTY IN CONNECTION WITH ONE OR MORE OF THE CIRCUMSTANCES SET FORTH IN SECTION 31.3.1 SHALL REQUIRE MITIGATION BASED UPON AGGREGATE DBH OF PROTECTED TREE(S) REMOVED. MITIGATION SHALL BE ACHIEVED BY SATISFYING ONE OR A COMBINATION OF THE FOLLOWING PROVISIONS: a. REPLANTING OF TREES: FOR EACH INCH OF DBH OF THE PROTECTED TREE(S) REMOVED TREES SHALL BE REPLANTED IN ACCORDANCE WITH THE FOLLOWING: 1. EACH TREE PROPOSED FOR PLANTING MUST HAVE A MINIMUM CALIPER OF ONE INCH OR GREATER. 2. REPLACEMENT TREES SHALL BE DETERMINED AS FOLLOWS; a. 6" –8" CALIPER TREES PROPOSED FOR REMOVAL, REPLACED WITH 1 TREE FOR EVERY 1 REMOVED; b. 8"–20" CALIPER TREES PROPOSED REMOVAL, REPLACED WITH 2 TREES FOR EVERY 1 TREE REMOVED; c. GREATER THAN 20" CALIPER TREE PROPOSED FOR REMOVAL, REPLACED WITH 3 TREES FOR EVERY 1 TREE REMOVED; AND 3. ALL PROPOSED REPLACEMENT TREES SHALL BE NATIVE AND SHALL NOT CONSISTS OF NON NATIVE, CULTIVARS OR INVASIVE SPECIES.	216 REPLACEMENT TREES NEEDED / 300+ PROPOSED	COMPLIES

DORE + WHITTIER

MASSACHUSETTS
260 MERRIMAC STREET BUILDING 7, 2ND FLOOR
NEWBURYPORT, MA 01950
P: (978) 499-2999

VERMONT
212 BATTERY STREET
BURLINGTON, VT 05401
P: (802) 863-1428

LANGAN

Langan Engineering and Environmental Services, LLC.
100 Cambridge Street, Suite 1310
Boston, MA 02114
T: 617.824.9100 F: 617.824.9101 www.langan.com

MEDWAY MUNICIPAL COMPLEX
120 MAIN STREET,
MEDWAY, MA 02053

PROJECT NUMBER: 151072201

SEAL AND SIGNATURE:

COMMONWEALTH OF MASSACHUSETTS · MICHAEL S. NOWAK · No. 1540 · REGISTERED LANDSCAPE ARCHITECT

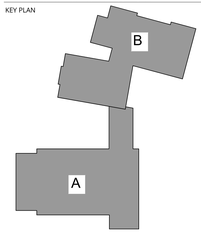
REVISIONS:

NO.	DATE	TITLE
1	09/18/2026	PEER REVIEW COMMENT RESPONSE

ISSUE TITLE AND DATE:
PERMIT DRAWINGS
7/20/2026

COPYRIGHT © 2023 by Dore & Whittier Architects, Inc. (D+W). These documents are D+W's instruments of service and as such, D+W retains all copyrights, common law, and statutory rights. Use of these documents without D+W's express written permission will result in copyright infringement.

KEY PLAN



ORIENTATION AND SCALE:



PROJECT NORTH

18"x24" HALF-SIZE PRINT
60 0 20 40 60
SCALE: 1" = 60'

36"x48" FULL-SIZE PRINT
30 0 15 30
SCALE: 1" = 30'

SHEET TITLE:

PLANTING PLAN

SHEET NUMBER:

LP101

Date: 9/21/2026 Time: 03:05 User: hschur Style Table: Langan.stb Layout: LP101 Document Code: 151072201-0301-LP101-0101

GENERAL LANDSCAPE PLANTING NOTES

1. NAMES OF PLANTS AS DESCRIBED ON THIS PLAN CONFORM TO THOSE GIVEN IN "STANDARDIZED PLANT NAMES", 1942 EDITION, PREPARED BY THE AMERICAN JOINT COMMITTEE ON HORTICULTURAL NOMENCLATURE. NAMES OF PLANT VARIETIES NOT INCLUDED THEREIN CONFORM TO NAMES GENERALLY ACCEPTED IN NURSERY TRADE.

2. STANDARDS FOR TYPE, SPREAD, HEIGHT, ROOT BALL AND QUALITY OF NEW PLANT MATERIAL SHALL BE IN ACCORDANCE WITH GUIDELINES AS SET FORTH IN THE "AMERICAN STANDARD FOR NURSERY STOCK", PUBLISHED BY THE AMERICAN NURSERY AND LANDSCAPE ASSOCIATION. PLANT MATERIAL SHALL HAVE NORMAL HABIT OF GROWTH AND BE HEALTHY, VIGOROUS, AND FREE FROM DISEASES AND INSECT INFESTATION.

3. NEW PLANT MATERIAL SHALL BE NURSERY GROWN UNLESS SPECIFIED OTHERWISE. ALL PLANTS SHALL BE SET PLUMB AND SHALL BEAR THE SAME RELATIONSHIP TO FINISHED GRADE AS THE PLANT'S ORIGINAL GRADE BEFORE DIGGING. PLANT MATERIAL OF THE SAME SPECIES AND SPECIFIED AS THE SAME SIZE SHOULD BE SIMILAR IN SHAPE, COLOR AND HABIT. THE LANDSCAPE ARCHITECT HAS THE RIGHT TO REJECT PLANT MATERIAL THAT DOES NOT CONFORM TO THE TYPICAL OR SPECIFIED HABIT OF THAT SPECIES. ALL TREES SHALL HAVE A STRAIGHT TRUNK AND FULL HEAD AND MEET ALL REQUIREMENTS SPECIFIED. ANY TREE THAT LOSES THE MAIN LEADER SHALL BE REPLACED.

4. THE BACKFILL MIXTURE AND SOIL MIXES TO BE INSTALLED PER THE SPECIFICATIONS.

5. THE CONTRACTOR SHALL BECOME FAMILIAR WITH THE SITE AND SUBGRADE DRAINAGE OR PERCOLATION CHARACTERISTICS, WHETHER THE SUBGRADE SOILS ARE EXISTING TO REMAIN OR IMPORTED AND PLACED. CONTRACTOR TO ENSURE POSITIVE VERTICAL DRAINAGE THROUGHOUT PLANTED AREAS. DISCREPANCIES SHALL BE ADDRESSED WITH THE PROJECT LANDSCAPE ARCHITECT PRIOR TO PURCHASING PLANT MATERIALS.

6. NO PLANT SHALL BE PUT INTO THE GROUND BEFORE FINISH GRADING HAS BEEN COMPLETED AND APPROVED BY THE PROJECT LANDSCAPE ARCHITECT OR PROJECT ENGINEER.

7. ALL PLANT INSTALLATIONS SHALL BE COMPLETED EITHER BETWEEN APRIL 1 – JUNE 15 OR SEPT 1 – OCTOBER 15, UNLESS OTHERWISE DIRECTED BY THE PROJECT LANDSCAPE ARCHITECT. SEE LAWN SEEDING DATES IN SEEDING NOTES.

8. ALL FENCE AND GUIDE RAIL INSTALLATIONS SHALL BE COMPLETED PRIOR TO COMMENCEMENT OF ANY LANDSCAPE PLANTING, LAWN AND GRASSES, OR IRRIGATION WORK.

9. PRIOR TO CONSTRUCTION, THE CONTRACTOR SHALL VERIFY THE LOCATION OF ALL EXISTING UNDERGROUND UTILITY AND SEWER LINES AND SHALL AVOID DAMAGE TO ALL UTILITIES DURING THE COURSE OF CONSTRUCTION. NOTIFY THE PROJECT ENGINEER AND OWNER IMMEDIATELY OF ANY CONFLICTS WITH PROPOSED PLANTING LOCATIONS. THE CONTRACTOR SHALL BE RESPONSIBLE FOR ANY DAMAGE.

10. LOCATIONS OF EXISTING BURIED UTILITY LINES SHOWN ON THE PLANS ARE BASED UPON BEST AVAILABLE INFORMATION AND ARE TO BE CONSIDERED APPROXIMATE. IT SHALL BE THE RESPONSIBILITY OF THE CONTRACTOR 1) TO VERIFY THE LOCATIONS OF UTILITY LINES AND ADJACENT TO THE WORK AREA 2) TO PROTECT OF ALL UTILITY LINES DURING THE CONSTRUCTION PERIOD 3) TO REPAIR ANY AND ALL DAMAGE TO UTILITIES, STRUCTURES, SITE APPURTENANCES, ETC. WHICH OCCURS AS A RESULT OF THE CONSTRUCTION.

11. THE CONTRACTOR SHALL NOT MAKE SUBSTITUTIONS. IF THE SPECIFIED LANDSCAPE MATERIAL IS NOT OBTAINABLE, THE CONTRACTOR SHALL SUBMIT PROOF OF NON-AVAILABILITY TO THE LANDSCAPE ARCHITECT AND OWNER, TOGETHER WITH A WRITTEN PROPOSAL FOR USE OF AN EQUIVALENT MATERIAL.

12. LANDSCAPE CONTRACTOR TO STAKE OUT PLANTING LOCATIONS, FOR REVIEW AND APPROVAL BY THE LANDSCAPE ARCHITECT AND/OR OWNER BEFORE PLANTING WORK BEGINS. THE LANDSCAPE ARCHITECT AND/OR OWNER SHALL DIRECT THE CONTRACTOR IN THE FINAL PLACEMENT OF ALL PLANT MATERIAL AND LOCATION OF PLANTING BEDS TO ENSURE COMPLIANCE WITH DESIGN INTENT UNLESS OTHERWISE INSTRUCTED.

13. ALL MATERIALS ARE SUBJECT TO THE APPROVAL OF THE LANDSCAPE ARCHITECT BEFORE, DURING, AND AFTER INSTALLATION. THE LANDSCAPE ARCHITECT MAY REVIEW PLANT MATERIALS AT THE SITE FOR COMPLIANCE WITH REQUIREMENTS FOR GENUS, SPECIES, VARIETY, SIZE, AND QUALITY. THE LANDSCAPE ARCHITECT RETAINS THE RIGHT TO FURTHER REVIEW PLANT MATERIALS FOR SIZE AND CONDITION OF BALLS AND ROOT SYSTEM, INSECTS, INJURIES, AND LATENT DEFECTS, AND TO REJECT UNSATISFACTORY OR DEFECTIVE MATERIAL AT ANY TIME DURING PROGRESS OF WORK. THE CONTRACTOR SHALL REMOVE REJECTED PLANT MATERIALS IMMEDIATELY FROM PROJECT SITE AS DIRECTED BY THE LANDSCAPE ARCHITECT OR OWNER.

14. ALL PLANT MATERIAL SHALL BE HEALTHY, VIGOROUS, AND FREE OF PESTS AND DISEASE. ANY PLANT MATERIAL WHICH IS DISEASED, DISTRESSED, MISSING, 25% OR MORE DEAD, WHICH DO NOT DEVELOP FROM PLANTING STOCK, THAT APPEAR UNHEALTHY OR UNSIGHTLY AND/OR HAVE LOST THEIR NATURAL SHAPE DUE TO DEAD BRANCHES DEAD, OR REJECTED FOR ANY OTHER REASON (PRIOR TO SUBSTANTIAL COMPLETION) SHALL BE PROMPTLY REMOVED FROM THE SITE AND REPLACED WITH MATERIAL OF THE SAME SPECIES, QUANTITY, AND SIZE AND MEETING ALL PLANT LIST SPECIFICATIONS.

15. CONTRACTOR SHALL BE RESPONSIBLE FOR DELIVERY SCHEDULE AND PROTECTION BETWEEN DELIVERY AND PLANTING PER SPECIFICATIONS TO MAINTAIN HEALTHY PLANT CONDITIONS.

16. DELIVERY, STORAGE, AND HANDLING
   A. PACKAGED MATERIALS: PACKAGED MATERIALS SHALL BE DELIVERED IN CONTAINERS SHOWING WEIGHT, ANALYSIS, AND NAME OF MANUFACTURER. MATERIALS SHALL BE PROTECTED FROM DETERIORATION DURING DELIVERY, AND WHILE STORED AT SITE.
   B. TREES AND SHRUBS: THE CONTRACTOR SHALL PROVIDE TREES AND SHRUBS DUG FOR THE GROWING SEASON FOR WHICH THEY WILL BE PLANTED. DO NOT PRUNE PRIOR TO DELIVERY UNLESS OTHERWISE DIRECTED BY THE LANDSCAPE ARCHITECT. DO NOT BEND OR BIND-TIE TREES OR SHRUBS IN SUCH A MANNER AS TO DAMAGE BARK, BREAK BRANCHES, OR DESTROY NATURAL SHAPE. PROVIDE PROTECTIVE COVERING DURING TRANSIT. DO NOT DROP BALLED AND BURLAPPED STOCK DURING DELIVERY OR HANDLING.
   C. ALL PLANTS SHALL BE BALLED AND BURLAPPED OR CONTAINER GROWN AS SPECIFIED. NO CONTAINER GROWN STOCK WILL BE ACCEPTED IF IT IS ROOT BOUND. ALL ROOTBALL WRAPPING AND BINDING MATERIAL MADE OF SYNTHETICS OR PLASTICS SHALL BE REMOVED FROM THE TOP OF THE BALL AT THE TIME OF PLANTING. IF THE PLANT IS SHIPPED WITH A WIRE BASKET AROUND THE ROOT BALL, THE WIRE BASKET SHALL BE CUT AND FOLDED DOWN 8 INCHES INTO THE PLANTING HOLE. WITH CONTAINER GROWN STOCK, THE CONTAINER SHALL BE REMOVED AND THE ROOT BALL SHALL BE CUT THROUGH THE SURFACE IN TWO LOCATIONS.
   D. THE CONTRACTOR SHALL HAVE TREES AND SHRUBS DELIVERED TO SITE AFTER PREPARATIONS FOR PLANTING HAVE BEEN COMPLETED AND PLANT IMMEDIATELY. IF PLANTING IS DELAYED MORE THAN 6 HOURS AFTER DELIVERY, THE CONTRACTOR SHALL SET TREES AND SHRUBS IN SHADE, PROTECT FROM WEATHER AND MECHANICAL DAMAGE AND KEEP ROOTS MOIST BY COVERING WITH MULCH, BURLAP OR OTHER ACCEPTABLE MEANS OF RETAINING MOISTURE.

17. ALL LANDSCAPED AREAS TO BE CLEARED OF ROCKS, STUMPS, TRASH AND OTHER UNSIGHTLY DEBRIS. ALL FINE GRADED AREAS SHOULD BE HAND RAKED SMOOTH ELIMINATING ANY CLUMPS AND UNEVEN SURFACES PRIOR TO PLANTING OR MULCHING.

18. ALL PLANT MATERIAL SHALL BE INSTALLED AS PER DETAILS, NOTES AND CONTRACT SPECIFICATIONS. THE LANDSCAPE ARCHITECT MAY REVIEW INSTALLATION AND MAINTENANCE PROCEDURES.

19. CONTRACTOR'S GUARANTEE: ALL PLANTINGS AND PLANTING AREAS SHALL BE PERMANENTLY MAINTAINED. NEW PLANT MATERIAL SHALL BE GUARANTEED TO BE ALIVE AND IN VIGOROUS GROWING CONDITION FOR A PERIOD OF ONE YEAR FOLLOWING ACCEPTANCE BY THE OWNER. THE CONTRACTOR SHALL BE RESPONSIBLE FOR FULLY MAINTAINING (INCLUDING BUT NOT LIMITED TO: WATERING, PRUNING, SPRAYING, MULCHING, FERTILIZING, ETC.) ALL OF THE PLANT MATERIALS AND LAWN FOR THE DURATION OF THE GUARANTEED PERIOD. PLANT MATERIAL FOUND TO BE UNHEALTHY, DYING OR DEAD DURING THIS PERIOD, SHALL BE REMOVED AND REPLACED IN KIND BY THE CONTRACTOR AT NO EXPENSE TO THE OWNER.

20. THE CONTRACTOR SHALL KEEP AREA CLEAN DURING DELIVERY AND INSTALLATION OF PLANT MATERIALS. REMOVE AND DISPOSE OF OFF-SITE ANY ACCUMULATED DEBRIS OR UNUSED MATERIALS. REPAIR DAMAGE TO ADJACENT AREAS CAUSED BY LANDSCAPE INSTALLATION OPERATIONS.

21. ALL PLANTS SHALL BE WATERED THOROUGHLY TWCE DURING THE FIRST 24- HOUR PERIOD AFTER PLANTING. ALL PLANTS SHALL THEN BE WATERED WEEKLY OR AS REQUIRED BY SITE AND WEATHER CONDITIONS TO MAINTAIN VIGOROUS AND HEALTHY PLANT GROWTH. CONTRACTOR SHALL CONFIRM WATER SOURCE WITH OWNER PRIOR TO BID AND INCLUDE ALTERNATE MEANS OF WATERING IF NECESSARY.

22. ON-SITE WATER SHALL BE FURNISHED BY THE CONTRACTOR. HOSE AND OTHER WATERING EQUIPMENT SHALL BE FURNISHED BY THE CONTRACTOR.

23. AFTER PLANT IS PLACED IN TREE PIT LOCATION, ALL TWINE HOLDING ROOT BALL TOGETHER SHOULD BE COMPLETELY REMOVED AND THE BURLAP SHOULD BE PULLED DOWN SO 1/3 OF THE ROOT BALL IS EXPOSED. SYNTHETIC BURLAP SHOULD BE COMPLETELY REMOVED AFTER INSTALLATION.

24. ALL TREES MUST BE GUYED OR STAKED IF REQUIRED BY ORDINANCE, IF LOCATED ON A SLOPE 3:1 OR GREATER, OR IF THE SITE IS LOCATED IN A HIGH WIND ZONE.

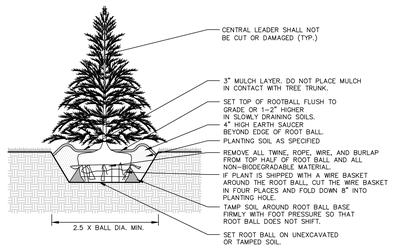
25. ALL EXPOSED GROUND SURFACES THAT ARE NOT PAVED WITHIN THE CONTRACT LIMIT LINE, AND THAT ARE NOT COVERED BY LANDSCAPE PLANTING OR SEEDING AS SPECIFIED, SHALL BE COVERED BY A NATURAL MULCH FROM A LOCAL SOURCE HARVESTED IN A SUSTAINABLE MANNER THAT WILL PREVENT SOIL EROSION AND THE EMANATION OF DUST. MULCH SHALL BE A FIBROUS SHREDDED HARDWOOD MULCH. MULCH SHOULD NOT BE PILED UP AROUND THE TRUNK OF ANY PLANT MATERIAL. NO MULCH OR TOPSOIL SHOULD BE TOUCHING THE BASE OF THE TRUNK ABOVE THE ROOT COLLAR.

26. THE CONTRACTOR SHALL BE RESPONSIBLE FOR VERIFYING ALL QUANTITIES SHOWN ON THESE PLANS BEFORE PRICING THE WORK. FOR ANY DISCREPANCIES BETWEEN THE PLANT SCHEDULE AND PLANTING PLAN THE GRAPHIC QUANTITY SHOWN SHALL GOVERN.

27. LANDSCAPE PUNCH LIST SITE VISITS TO BE PERFORMED BY THE PROJECT LANDSCAPE ARCHITECT, IF UNDER CONTRACT FOR SUCH WORK, WILL NOT BE SCHEDULED UNTIL CONFIRMATION IS RECEIVED THAT ALL PROPOSED LANDSCAPE ITEMS HAVE BEEN INSTALLED, OR DEFICIENCIES NOTED IN THE PRIOR PUNCH LIST REPORT HAVE BEEN CORRECTED. THE PUNCH LIST SITE VISIT WILL THEN BE PERFORMED WITHIN 10 BUSINESS DAYS.

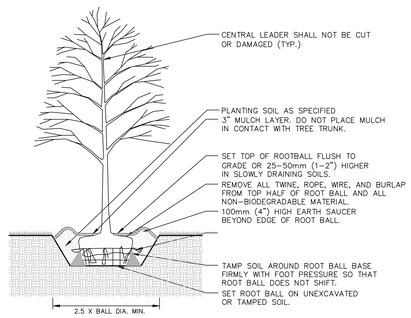
28. CONTRACTOR SHALL ASSESS THE NEED FOR ANIMAL PROTECTION ON SITE. IF DEEMED NECESSARY, TREES SHALL BE PROTECTED AS NECESSARY.

29. ALL SLOPES 3:1 OR GREATER AND ALL SIDE SLOPES OF BASINS SHALL REQUIRE AN EROSION CONTROL BLANKET: ERONET SC150 BY NORTH AMERICAN GREEN, OR APPROVED EQUAL.



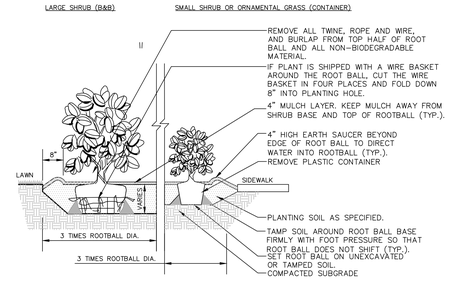
EVERGREEN TREE PLANTING

NTS



DECIDUOUS TREE PLANTING

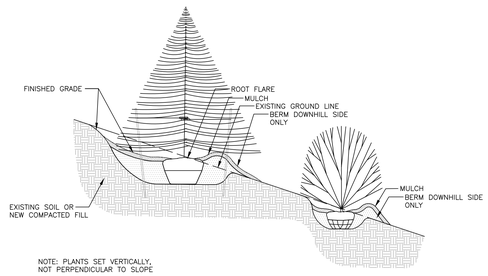
NTS



NOTES: 1. ALL SHRUBS TO BE SET PLUMB.
2. REFER TO LANDSCAPE PLAN FOR SPACING OF INDIVIDUAL PLANTS.
3. REMOVE ALL WIRE, PLASTIC, TAGS OR SYNTHETIC MATERIAL FROM PLANTS PRIOR TO PLANTING.

SHRUB AND ORNAMENTAL GRASS PLANTING

NTS



NOTE: PLANTS SET VERTICALLY, NOT PERPENDICULAR TO SLOPE

SLOPE PLANTING

NTS

DECISION DATE: _____

ENDORSEMENT DATE: _____

MEDWAY PLANNING & ECONOMIC DEVELOPMENT BOARD

DORE + WHITTIER

MASSACHUSETTS
260 MERRIMAC STREET BUILDING 7, 2ND FLOOR
NEWBURYPORT, MA 01950
P: (978) 499-2999

VERMONT
212 BATTERY STREET
BURLINGTON, VT 05401
P: (802) 863-1428

LANGAN

Langan Engineering and Environmental Services, LLC.
100 Cambridge Street, Suite 1310
Boston, MA 02114
T: 617.824.9100 F: 617.824.9101 www.langan.com

MEDWAY MUNICIPAL COMPLEX
120 MAIN STREET,
MEDWAY, MA 02053

PROJECT NUMBER: 151072201

SEAL AND SIGNATURE:

COMMONWEALTH OF MASSACHUSETTS MICHAEL S. NOWICKI No. 1540 REGISTERED LANDSCAPE ARCHITECT

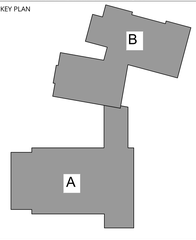
REVISIONS:

NO.	DATE	TITLE
1	09/18/2026	PEER REVIEW COMMENT RESPONSE

ISSUE TITLE AND DATE:
PERMIT DRAWINGS
7/20/2026

COPYRIGHT © 2023 by Dore & Whittier Architects, Inc. (D+W). These documents are D+W's instruments of service and as such, D+W retains all copyrights, common law and statutory rights. Use of these documents without D+W's express written permission will result in copyright infringement.

KEY PLAN



ORIENTATION AND SCALE:



PROJECT NORTH

18"X24" HALF-SIZE PRINT
60 0 20 40 60
SCALE: 1" = 60'

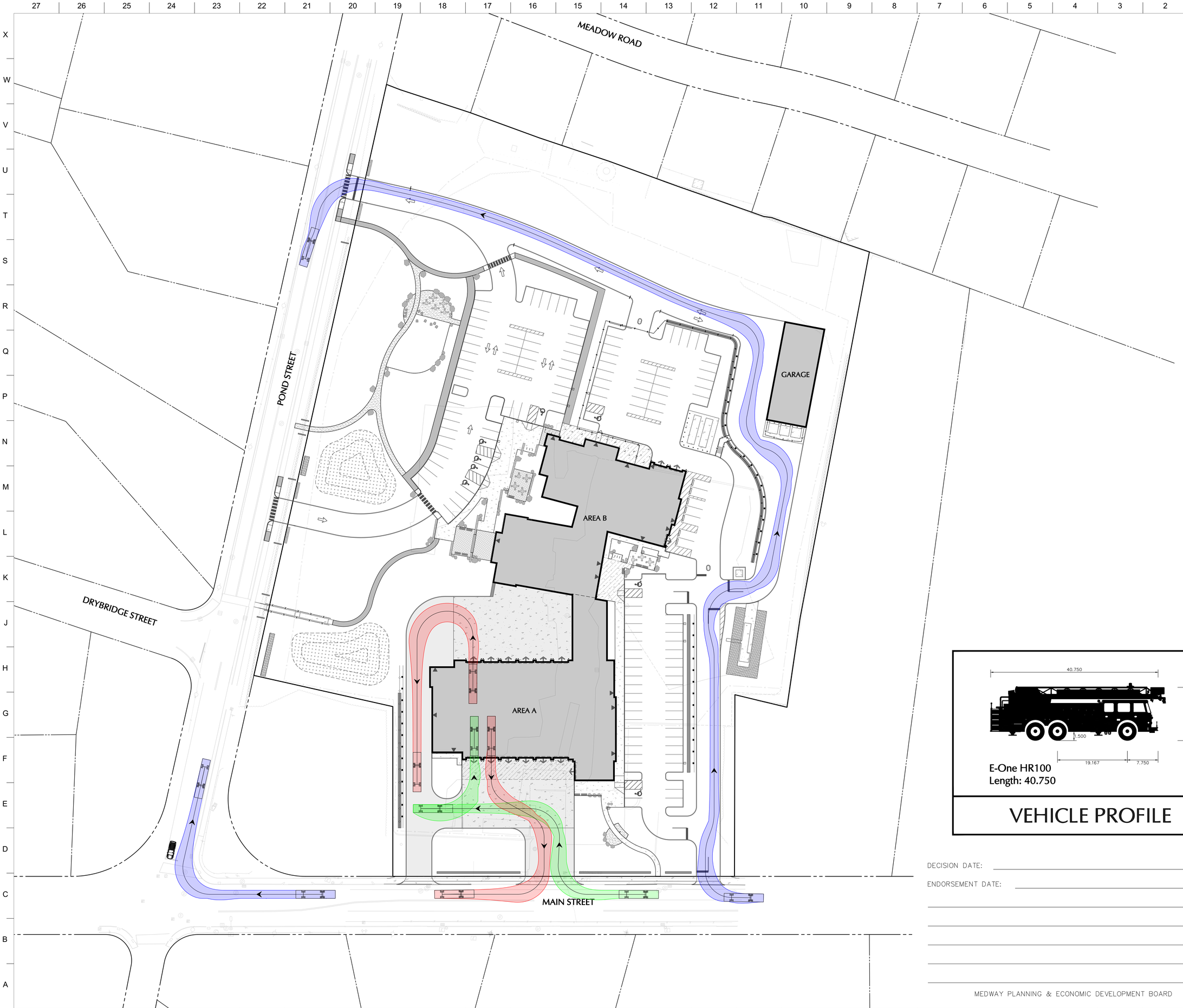
36"X48" FULL-SIZE PRINT
30 0 15 30
SCALE: 1" = 30'

SHEET TITLE:

PLANTING DETAILS AND NOTES

SHEET NUMBER:

LP501



DORE + WHITTIER

MASSACHUSETTS
260 MERRIMAC STREET BUILDING 7, 2ND FLOOR
NEWBURYPORT, MA 01950
P: (978) 499-2999

VERMONT
212 BATTERY STREET
BURLINGTON, VT 05401
P: (802) 863-1428

LANGAN

Langan Engineering and Environmental Services, LLC.
100 Cambridge Street, Suite 1310
Boston, MA 02114
T: 617.824.9100 F: 617.824.9101 www.langan.com

MEDWAY MUNICIPAL COMPLEX

120 MAIN STREET,
MEDWAY, MA 02053

E-One HR100
Length: 40.750

VEHICLE PROFILE

DECISION DATE: _____

ENDORSEMENT DATE: _____

MEDWAY PLANNING & ECONOMIC DEVELOPMENT BOARD

PROJECT NUMBER: 151072201

SEAL AND SIGNATURE:

COMMONWEALTH OF MASSACHUSETTS
JOHN D. PLAISTED
No. 38978
REGISTERED PROFESSIONAL ENGINEER

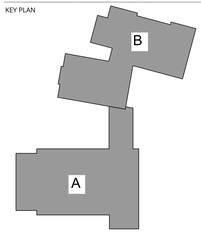
REVISIONS:

NO.	DATE	TITLE
1	09/18/2026	PEER REVIEW COMMENT RESPONSE

ISSUE TITLE AND DATE:
PERMIT DRAWINGS
7/20/2026

COPYRIGHT © 2023 by Dore & Whittier Architects, Inc. (D+W). These documents are D+W's instruments of service and as such, D+W retains all copyrights, common law, and statutory rights. Use of these documents without D+W's express written permission will result in copyright infringement.

KEY PLAN



ORIENTATION AND SCALE:



PROJECT NORTH

18"X24" HALF-SIZE PRINT
60 0 20 40 60
SCALE: 1" = 60'

36"X48" FULL-SIZE PRINT
30 0 15 30
SCALE: 1" = 30'

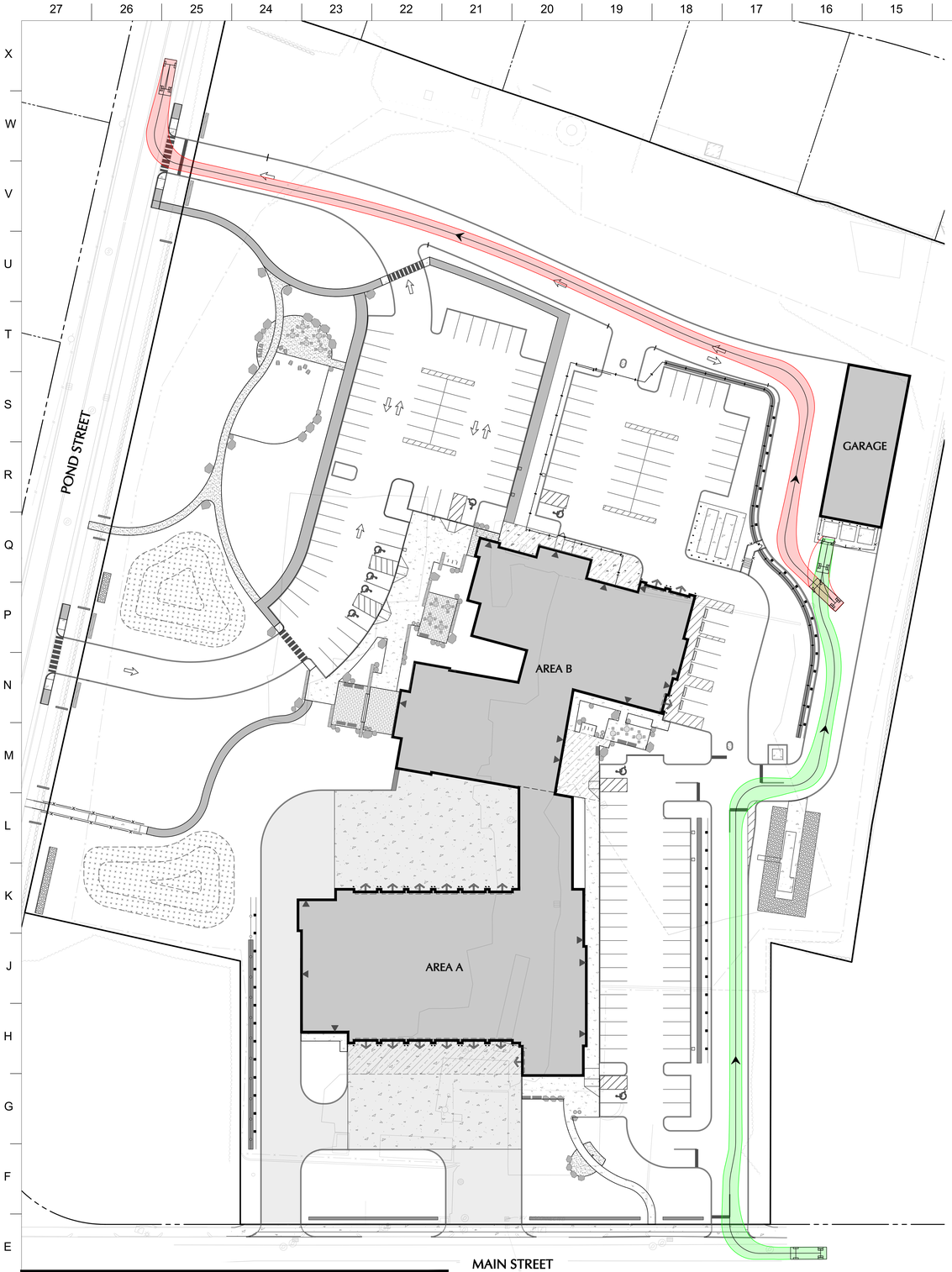
SHEET TITLE:

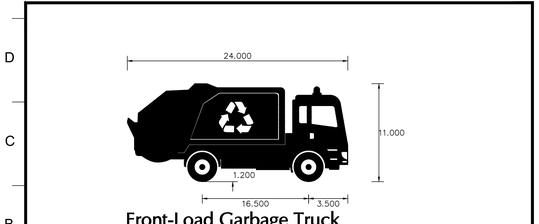
FIRE TURNING MOVEMENTS

SHEET NUMBER:

TM101

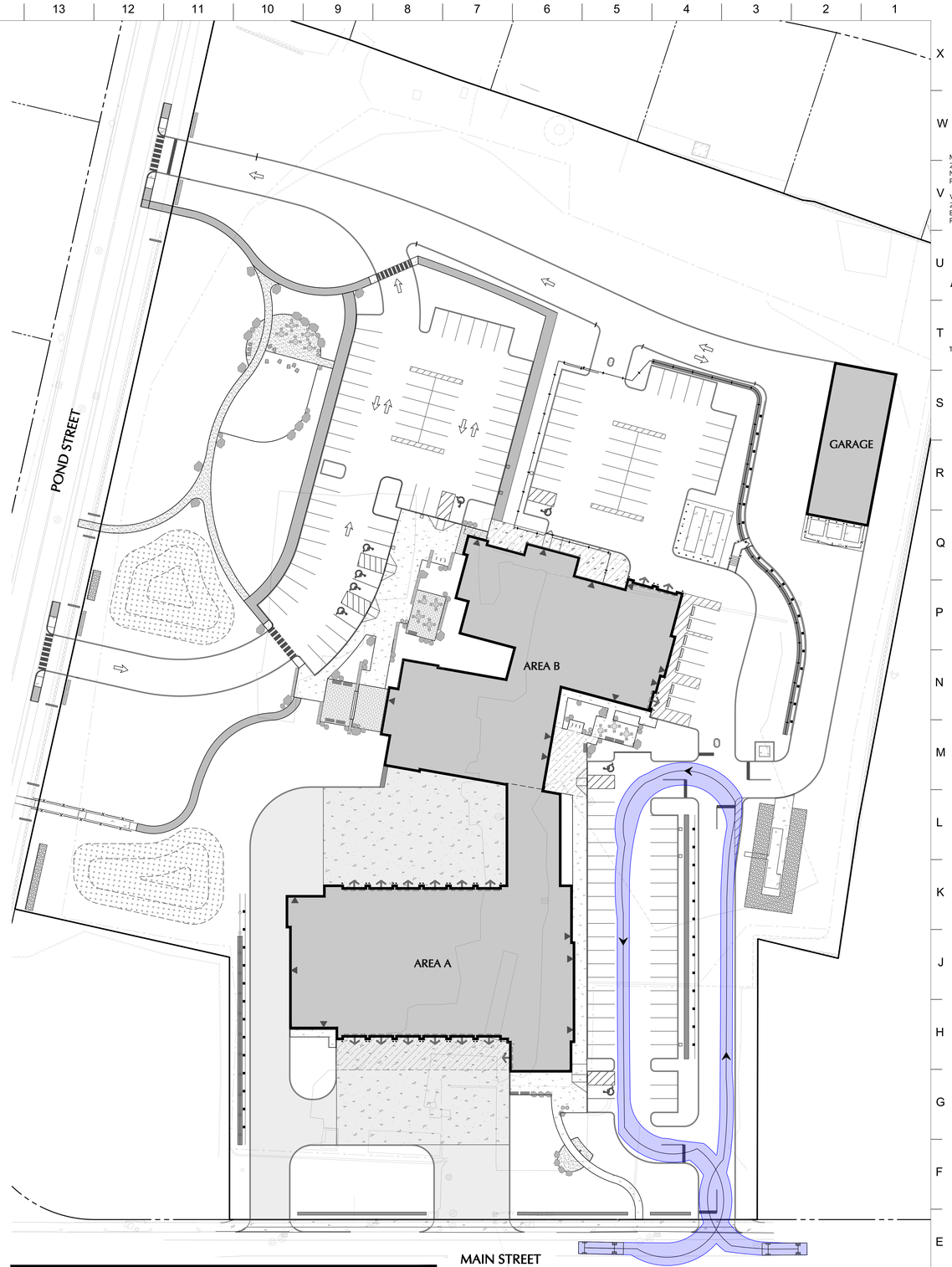
Date: 9/21/2026 Time: 03:06 User: hschur Style Table: Langan.stb Layout: TM101 Document Code: 151072201-0301-CS201-0101

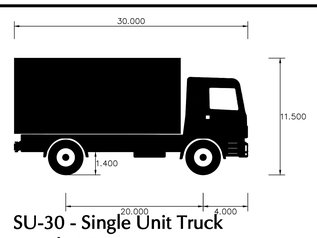




Front-Load Garbage Truck
Length: 24.000

VEHICLE PROFILE





SU-30 - Single Unit Truck
Length: 30.000

VEHICLE PROFILE

DECISION DATE: _____

ENDORSEMENT DATE: _____

MEDWAY PLANNING & ECONOMIC DEVELOPMENT BOARD

DORE + WHITTIER

MASSACHUSETTS
260 MERRIMAC STREET BUILDING 7, 2ND FLOOR
NEWBURYPORT, MA 01950
P: (978) 499-2999

VERMONT
212 BATTERY STREET
BURLINGTON, VT 05401
P: (802) 863-1428

LANGAN

Langan Engineering and Environmental Services, LLC.
100 Cambridge Street, Suite 1310
Boston, MA 02114
T: 617.824.9100 F: 617.824.9101 www.langan.com

MEDWAY MUNICIPAL COMPLEX
120 MAIN STREET,
MEDWAY, MA 02053

PROJECT NUMBER: 151072201

SEAL AND SIGNATURE:

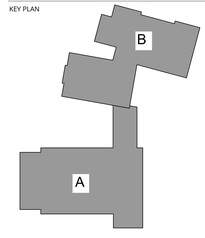
REVISIONS:

NO.	DATE	TITLE
1	09/18/2026	PEER REVIEW COMMENT RESPONSE

ISSUE TITLE AND DATE:
PERMIT DRAWINGS
7/20/2026

COPYRIGHT © 2023 by Dore & Whittier Architects, Inc. (D+W). These documents are D+W's instruments of service and as such, D+W retains all copyrights, common law, and statutory rights. Use of these documents without D+W's express written permission will result in copyright infringement.

KEY PLAN



ORIENTATION AND SCALE:



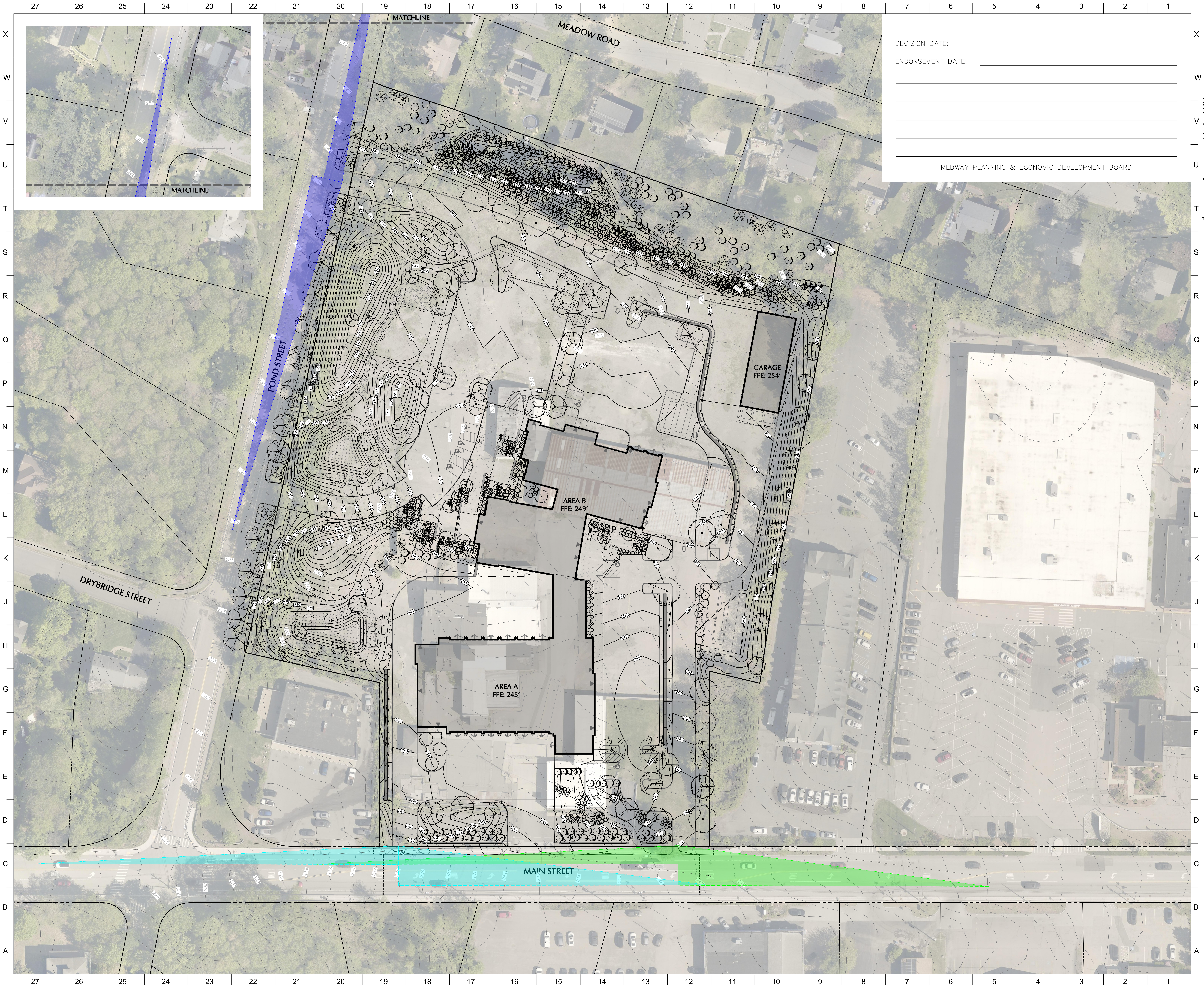
18"X24" HALF-SIZE PRINT
60 0 20 40 60
SCALE: 1" = 60'

36"X48" FULL-SIZE PRINT
30 0 15 30
SCALE: 1" = 30'

SHEET TITLE:
TRASH & DELIVERY TURNING MOVEMENTS

SHEET NUMBER:
TM102

Date: 9/21/2026 Time: 03:06 User: hschur Style Table: Langan.stb Layout: TM102 Document Code: FG01-151072201-0301-KS101-0102



DECISION DATE: ______

ENDORSEMENT DATE: ______

MEDWAY PLANNING & ECONOMIC DEVELOPMENT BOARD

DORE + WHITTIER

MASSACHUSETTS
260 MERRIMAC STREET BUILDING 7, 2ND FLOOR
NEWBURYPORT, MA 01950
P: (978) 499-2999

VERMONT
212 BATTERY STREET
BURLINGTON, VT 05401
P: (802) 863-1428

LANGAN

Langan Engineering and Environmental Services, LLC.
100 Cambridge Street, Suite 1310
Boston, MA 02114
T: 617.824.9100 F: 617.824.9101 www.langan.com

MEDWAY MUNICIPAL COMPLEX

120 MAIN STREET,
MEDWAY, MA 02053

PROJECT NUMBER: 151072201

SEAL AND SIGNATURE:

JOHN D. PLANTE CIVIL No. 38118 — COMMONWEALTH OF MASSACHUSETTS REGISTERED PROFESSIONAL ENGINEER

REVISIONS:

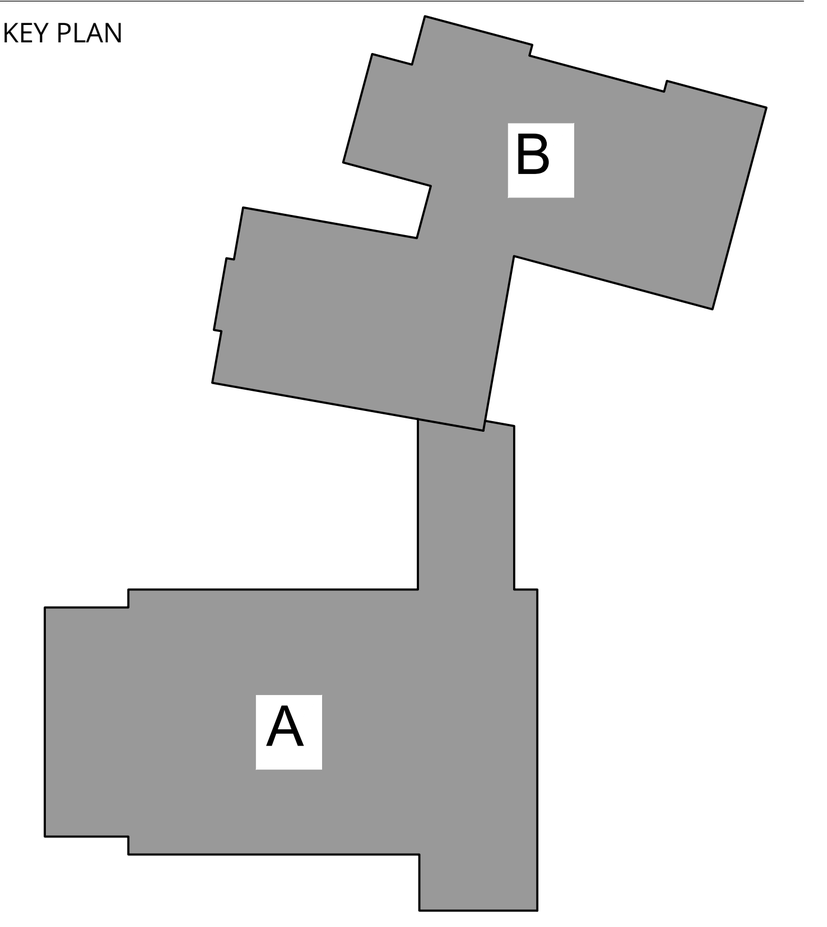
NO.	DATE	TITLE
1	09/18/2026	PEER REVIEW COMMENT RESPONSE

ISSUE TITLE AND DATE:

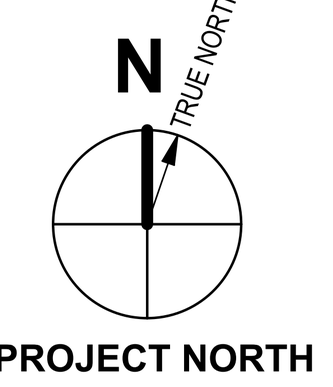
PERMIT DRAWINGS
7/20/2026

COPYRIGHT © 2023 by Dore & Whittier Architects, Inc. (D+W). These documents are D+W's instruments of service and as such, D+W retains all copyrights, common law, and statutory rights. Use of these documents without D+W's express written permission will result in copyright infringement.

KEY PLAN



ORIENTATION AND SCALE:



18"X24" HALF-SIZE PRINT
SCALE: 1" = 60'

36"X48" FULL-SIZE PRINT
SCALE: 1" = 30'

SHEET TITLE:

SIGHT TRIANGLES

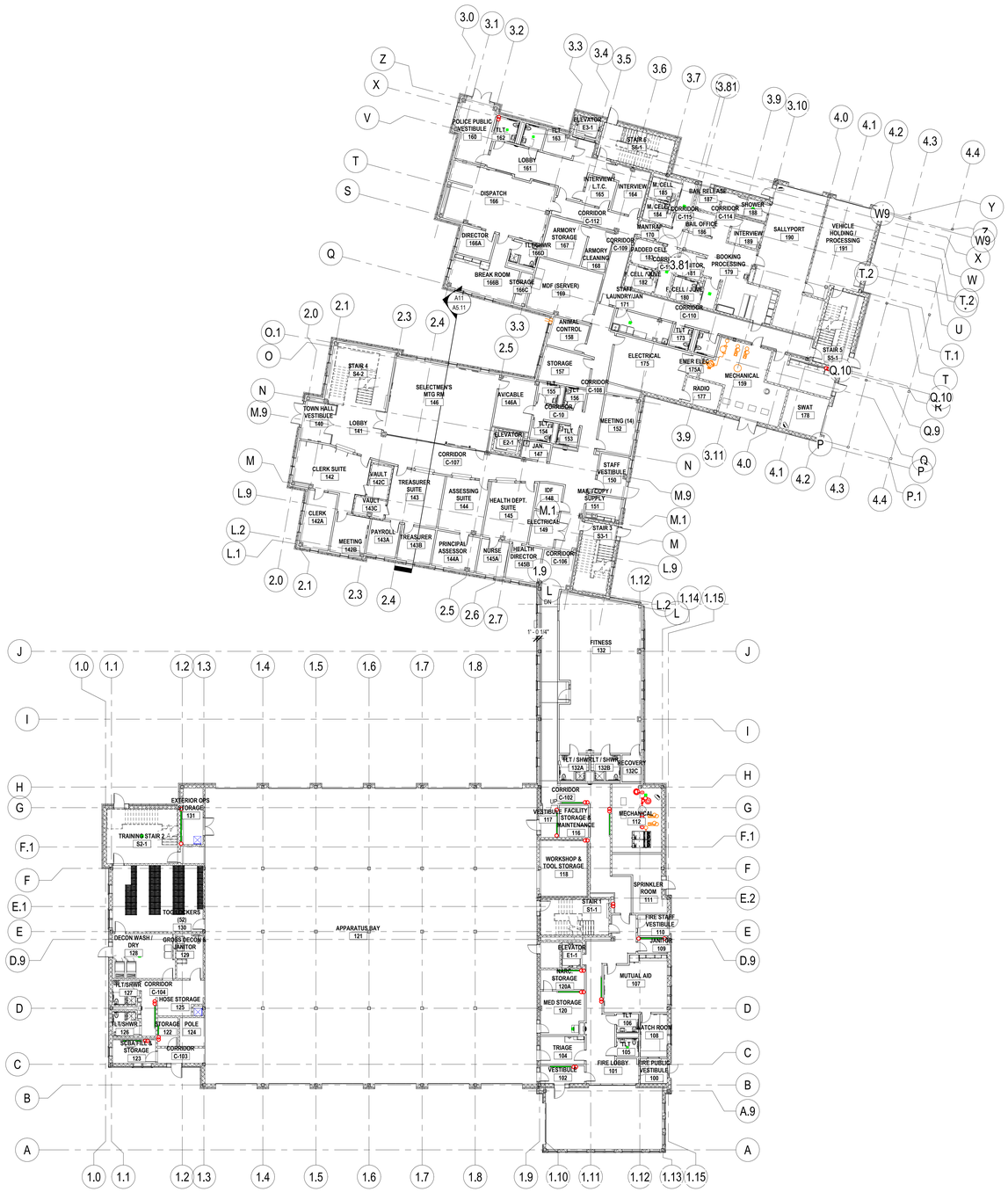
SHEET NUMBER:

TM103

Date: 9/21/2026 Time: 03:08 User: hschur Style Table: Langan.stb Layout: TM103 Document Code: FG01-151072201-0301-KT101-0101

PLAN GENERAL NOTES

1. ALL INTERIOR CMU PARTITIONS ARE TYPE "E", UNLESS NOTED OTHERWISE. ALL INTERIOR STUD PARTITIONS ARE TYPE "A", UNLESS NOTED OTHERWISE.
2. WHERE DOORS, WINDOWS, BORROWED LITES, GRILLES, OR OPENINGS OCCUR IT SHALL BE ASSUMED THAT THE WALL CONSTRUCTION IS THE SAME ABOVE AS ADJACENT, UNLESS NOTED OTHERWISE.
3. WHERE COLUMN LINES ARE SHOWN INSIDE WALLS AND PARALLEL TO THE WALL, IT SHALL BE ASSUMED THAT THE WALL IS CENTERED ON THE COLUMN LINE UNLESS DIMENSIONED OTHERWISE.
4. WHERE ENLARGED PLANS ARE INDICATED, REFER TO ENLARGED PLAN SHEET FOR DIMENSIONS, WALL TYPES, AND DETAIL REFERENCES.
5. REFER TO HORIZONTAL CONTROL PLANS AND STRUCTURAL DRAWINGS FOR SLAB INFORMATION (INCLUDING DEPRESSIONS, EDGE DIMENSIONS, AND SHAFT OPENINGS).



B24 LEVEL 1 OVERALL
1/16" = 1'-0"

DORE + WHITTIER

MASSACHUSETTS
260 MERRIMAC STREET BUILDING 7, 2ND FLOOR
NEWBURYPORT, MA 01950
P: (978) 499-2999

VERMONT
212 BATTERY STREET
BURLINGTON, VT 05401
P: (802) 863-1428

MEDWAY MUNICIPAL COMPLEX

120 Main Street
Medway Massachusetts 02053

PROJECT NUMBER: 25-0867

SEAL AND SIGNATURE:

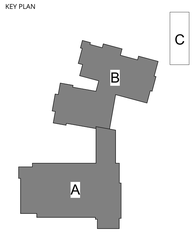
REVISIONS:

NO.	DATE	TITLE
1	09/18/2026	PEER REVIEW COMMENT RESPONSE

ISSUE TITLE AND DATE:
PERMIT DRAWINGS
7/20/2026

COPYRIGHT © 2026 by Dore & Whittier Architects, Inc. (D+W). These documents are D+W's instruments of service and as such, D+W retains all copyrights, common law, and statutory rights. Use of these documents without D+W's express written permission will result in copyright infringement.

KEY PLAN



ORIENTATION AND SCALE:



18"X24" HALF-SIZE PRINT
0 16' 32' 64'
SCALE: 1/32"=1'-0" GRAPHIC SCALE

36"X48" FULL-SIZE PRINT
0 8' 16' 32'
SCALE: 1/16"=1'-0" GRAPHIC SCALE

SHEET TITLE:
LEVEL 1 OVERALL PLAN

SHEET NUMBER:
A1.10

Autodesk Docs://Medway Municipal Complex/ARCH - 867 - MEDWAY MUNICIPAL COMPLEX.rvt
9/17/2026 9:33:28 PM

PLAN GENERAL NOTES

1. ALL INTERIOR CMU PARTITIONS ARE TYPE "E", UNLESS NOTED OTHERWISE. ALL INTERIOR STUD PARTITIONS ARE TYPE "A", UNLESS NOTED OTHERWISE.
2. WHERE DOORS, WINDOWS, BORROWED LITES, GRILLES, OR OPENINGS OCCUR IT SHALL BE ASSUMED THAT THE WALL CONSTRUCTION IS THE SAME ABOVE AS ADJACENT, UNLESS NOTED OTHERWISE.
3. WHERE COLUMN LINES ARE SHOWN INSIDE WALLS AND PARALLEL TO THE WALL, IT SHALL BE ASSUMED THAT THE WALL IS CENTERED ON THE COLUMN LINE UNLESS DIMENSIONED OTHERWISE.
4. WHERE ENLARGED PLANS ARE INDICATED, REFER TO ENLARGED PLAN SHEET FOR DIMENSIONS, WALL TYPES, AND DETAIL REFERENCES.
5. REFER TO HORIZONTAL CONTROL PLANS AND STRUCTURAL DRAWINGS FOR SLAB INFORMATION (INCLUDING DEPRESSIONS, EDGE DIMENSIONS, AND SHAFT OPENINGS).

DORE + WHITTIER

MASSACHUSETTS
260 MERRIMAC STREET BUILDING 7, 2ND FLOOR
NEWBURYPORT, MA 01950
P: (978) 499-2999

VERMONT
212 BATTERY STREET
BURLINGTON, VT 05401
P: (802) 863-1428

MEDWAY MUNICIPAL COMPLEX

120 Main Street
Medway Massachusetts 02053

PROJECT NUMBER: 25-0867

SEAL AND SIGNATURE:

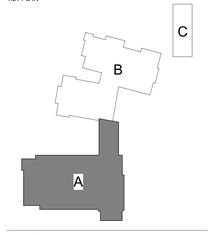
REVISIONS:

NO.	DATE	TITLE
1	09/18/2026	PEER REVIEW COMMENT RESPONSE

ISSUE TITLE AND DATE:
PERMIT DRAWINGS
7/20/2026

COPYRIGHT © 2026 by Dore & Whittier Architects, Inc. (D+W). These documents are D+W's instruments of service and as such, D+W retains all copyrights, common law, and statutory rights. Use of these documents without D+W's express written permission will result in copyright infringement.

KEY PLAN



ORIENTATION AND SCALE:

PROJECT NORTH

18"X24" HALF-SIZE PRINT
0 8' 16' 32'
SCALE: 1/16"=1'-0" GRAPHIC SCALE

36"X48" FULL-SIZE PRINT
0 4' 8' 16'
SCALE: 1/8"=1'-0" GRAPHIC SCALE

SHEET TITLE:
LEVEL 1 - AREA A

SHEET NUMBER:
A1.11

A27 LEVEL 1 - A
1/8" = 1'-0"

Autodesk Docs://Medway Municipal Complex/ARCH - 867 - MEDWAY MUNICIPAL COMPLEX.rvt
9/17/2026 9:33:44 PM

PLAN GENERAL NOTES

1. ALL INTERIOR CMU PARTITIONS ARE TYPE "E", UNLESS NOTED OTHERWISE. ALL INTERIOR STUD PARTITIONS ARE TYPE "A", UNLESS NOTED OTHERWISE.
2. WHERE DOORS, WINDOWS, BORROWED LITES, GRILLES, OR OPENINGS OCCUR IT SHALL BE ASSUMED THAT THE WALL CONSTRUCTION IS THE SAME ABOVE AS ADJACENT, UNLESS NOTED OTHERWISE.
3. WHERE COLUMN LINES ARE SHOWN INSIDE WALLS AND PARALLEL TO THE WALL, IT SHALL BE ASSUMED THAT THE WALL IS CENTERED ON THE COLUMN LINE UNLESS DIMENSIONED OTHERWISE.
4. WHERE ENLARGED PLANS ARE INDICATED, REFER TO ENLARGED PLAN SHEET FOR DIMENSIONS, WALL TYPES, AND DETAIL REFERENCES.
5. REFER TO HORIZONTAL CONTROL PLANS AND STRUCTURAL DRAWINGS FOR SLAB INFORMATION (INCLUDING DEPRESSIONS, EDGE DIMENSIONS, AND SHAFT OPENINGS).

BALLISTIC RESISTANT ENTRY SYSTEM
BALLISTIC RESISTANT TRANSACTION WINDOW
BALLISTIC RESISTANT WINDOW(S)
BALLISTIC RESISTANT WINDOW PANEL AT EXTERIOR WINDOWS
ROOF LINE ABOVE
MATCHLINE
MATCHLINE

A27 LEVEL 1 - B
1/8" = 1'-0"

DORE + WHITTIER

MASSACHUSETTS
260 MERRIMAC STREET BUILDING 7, 2ND FLOOR
NEWBURYPORT, MA 01950
P: (978) 499-2999

VERMONT
212 BATTERY STREET
BURLINGTON, VT 05401
P: (802) 863-1428

MEDWAY MUNICIPAL COMPLEX

120 Main Street
Medway Massachusetts 02053

PROJECT NUMBER: 25-0867

SEAL AND SIGNATURE:

REVISIONS:

NO.	DATE	TITLE
1.	09/18/2026	PEER REVIEW COMMENT RESPONSE

ISSUE TITLE AND DATE:
PERMIT DRAWINGS
7/20/2026

COPYRIGHT © 2026 by Dore & Whittier Architects, Inc. (D+W). These documents are D+W's instruments of service and as such, D+W retains all copyrights, common law, and statutory rights. Use of these documents without D+W's express written permission will result in copyright infringement.

KEY PLAN

ORIENTATION AND SCALE:
PROJECT NORTH
18"X24" HALF-SIZE PRINT
SCALE: 1/16"=1'-0" GRAPHIC SCALE
36"X48" FULL-SIZE PRINT
SCALE: 1/8"=1'-0" GRAPHIC SCALE

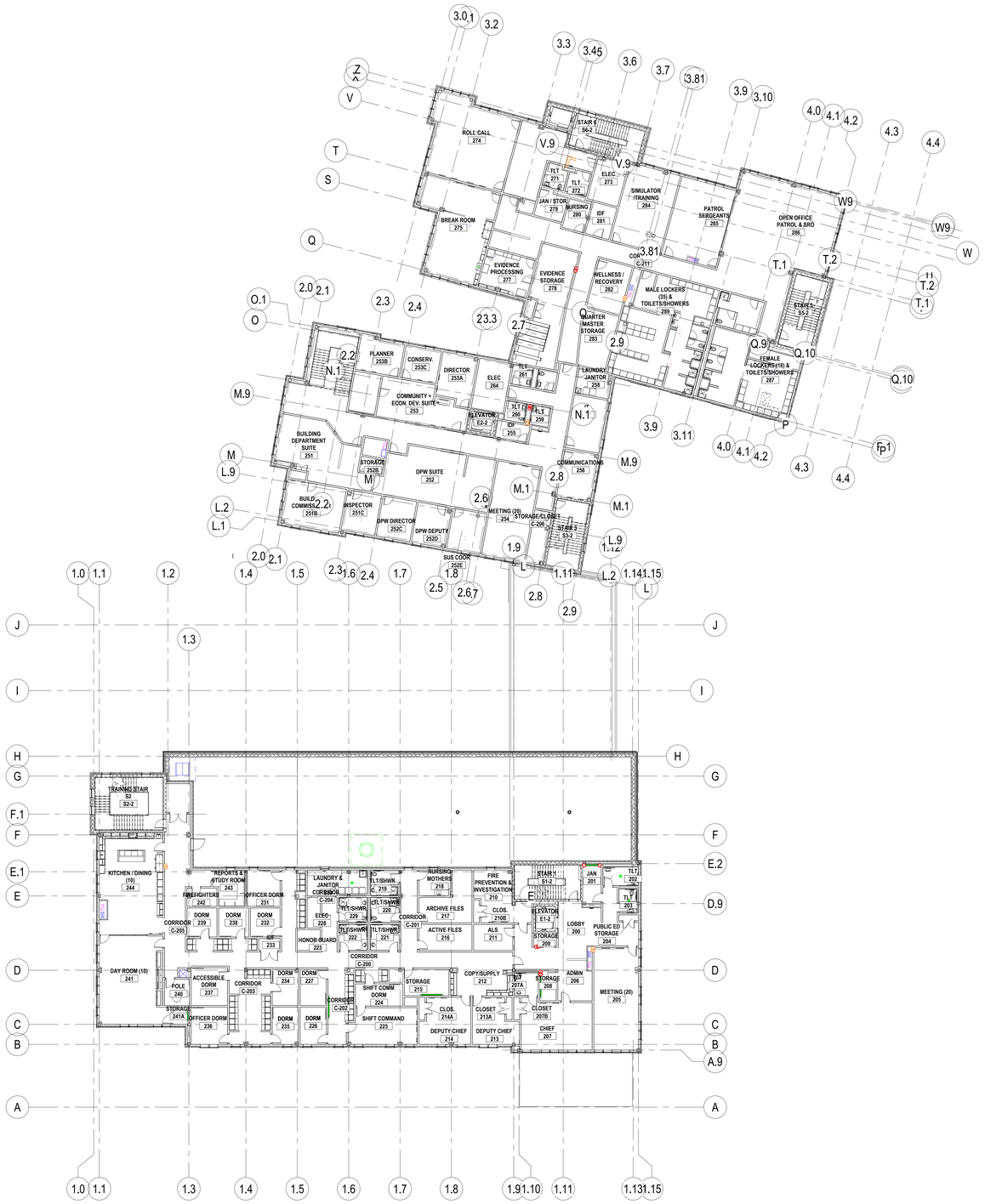
SHEET TITLE:
LEVEL 1 - AREA B

SHEET NUMBER:
A1.12

Autodesk Docs://Medway Municipal Complex/ARCH - 867 - MEDWAY MUNICIPAL COMPLEX.rvt
9/17/2026 9:33:52 PM

PLAN GENERAL NOTES

1. ALL INTERIOR CMU PARTITIONS ARE TYPE "E", UNLESS NOTED OTHERWISE. ALL INTERIOR STUD PARTITIONS ARE TYPE "A", UNLESS NOTED OTHERWISE.
2. WHERE DOORS, WINDOWS, BORROWED LITES, GRILLES, OR OPENINGS OCCUR IT SHALL BE ASSUMED THAT THE WALL CONSTRUCTION IS THE SAME ABOVE AS ADJACENT, UNLESS NOTED OTHERWISE.
3. WHERE COLUMN LINES ARE SHOWN INSIDE WALLS AND PARALLEL TO THE WALL, IT SHALL BE ASSUMED THAT THE WALL IS CENTERED ON THE COLUMN LINE UNLESS DIMENSIONED OTHERWISE.
4. WHERE ENLARGED PLANS ARE INDICATED, REFER TO ENLARGED PLAN SHEET FOR DIMENSIONS, WALL TYPES, AND DETAIL REFERENCES.
5. REFER TO HORIZONTAL CONTROL PLANS AND STRUCTURAL DRAWINGS FOR SLAB INFORMATION (INCLUDING DEPRESSIONS, EDGE DIMENSIONS, AND SHAFT OPENINGS).



B24 LEVEL 2 OVERALL
1/16" = 1'-0"

DORE + WHITTIER

MASSACHUSETTS
260 MERRIMAC STREET BUILDING 7, 2ND FLOOR
NEWBURYPORT, MA 01950
P: (978) 499-2999

VERMONT
212 BATTERY STREET
BURLINGTON, VT 05401
P: (802) 863-1428

MEDWAY MUNICIPAL COMPLEX

120 Main Street
Medway Massachusetts 02053

PROJECT NUMBER: 25-0867

SEAL AND SIGNATURE:

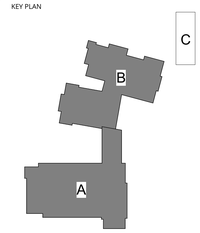
REVISIONS:

NO.	DATE	TITLE
1	09/18/2026	PEER REVIEW COMMENT RESPONSE

ISSUE TITLE AND DATE:
PERMIT DRAWINGS
7/20/2026

COPYRIGHT © 2026 by Dore & Whittier Architects, Inc. (D+W). These documents are D+W's instruments of service and as such, D+W retains all copyrights, common law, and statutory rights. Use of these documents without D+W's express written permission will result in copyright infringement.

KEY PLAN



ORIENTATION AND SCALE:

PROJECT NORTH

18"X24" HALF-SIZE PRINT
0 16' 32' 64'
SCALE: 1/32"=1'-0" GRAPHIC SCALE

36"X48" FULL-SIZE PRINT
0 8' 16' 32'
SCALE: 1/16"=1'-0" GRAPHIC SCALE

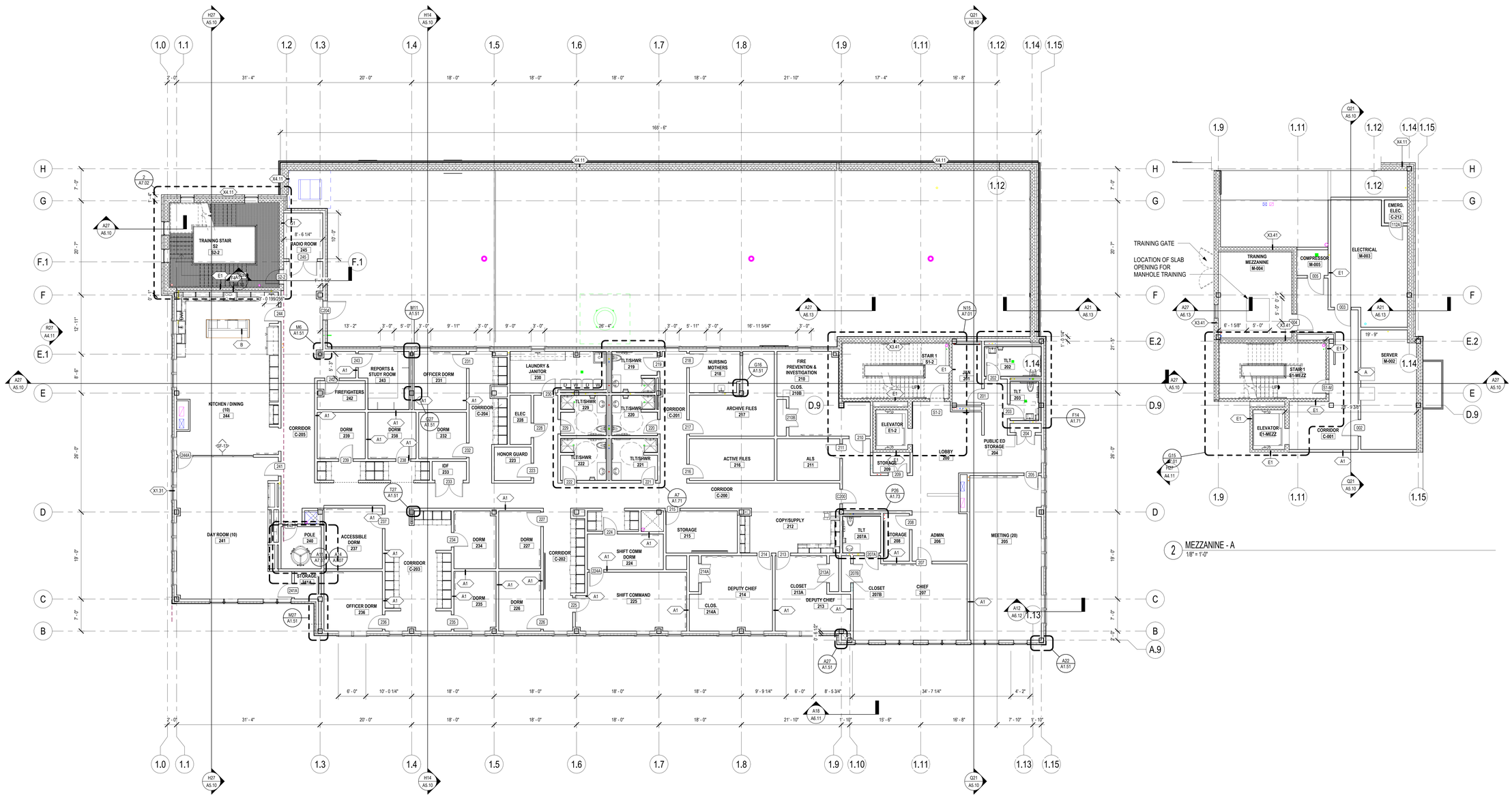
SHEET TITLE:
LEVEL 2 OVERALL PLAN

SHEET NUMBER:
A1.20

Autodesk Docs://Medway Municipal Complex/ARCH - 867 - MEDWAY MUNICIPAL COMPLEX.rvt
9/17/2026 9:33:57 PM

PLAN GENERAL NOTES

1. ALL INTERIOR CMU PARTITIONS ARE TYPE "E", UNLESS NOTED OTHERWISE. ALL INTERIOR STUD PARTITIONS ARE TYPE "A", UNLESS NOTED OTHERWISE.
2. WHERE DOORS, WINDOWS, BORROWED LITES, GRILLES, OR OPENINGS OCCUR IT SHALL BE ASSUMED THAT THE WALL CONSTRUCTION IS THE SAME ABOVE AS ADJACENT, UNLESS NOTED OTHERWISE.
3. WHERE COLUMN LINES ARE SHOWN INSIDE WALLS AND PARALLEL TO THE WALL, IT SHALL BE ASSUMED THAT THE WALL IS CENTERED ON THE COLUMN LINE UNLESS DIMENSIONED OTHERWISE.
4. WHERE ENLARGED PLANS ARE INDICATED, REFER TO ENLARGED PLAN SHEET FOR DIMENSIONS, WALL TYPES, AND DETAIL REFERENCES.
5. REFER TO HORIZONTAL CONTROL PLANS AND STRUCTURAL DRAWINGS FOR SLAB INFORMATION (INCLUDING DEPRESSIONS, EDGE DIMENSIONS, AND SHAFT OPENINGS).



2 MEZZANINE - A
1/8" = 1'-0"

A27 LEVEL 2 - A
1/8" = 1'-0"

DORE + WHITTIER

MASSACHUSETTS
260 MERRIMAC STREET BUILDING 7, 2ND FLOOR
NEWBURYPORT, MA 01950
P: (978) 499-2999

VERMONT
212 BATTERY STREET
BURLINGTON, VT 05401
P: (802) 863-1428

MEDWAY MUNICIPAL COMPLEX

120 Main Street
Medway Massachusetts 02053

PROJECT NUMBER: 25-0867

SEAL AND SIGNATURE:

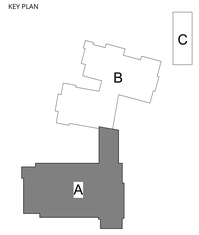
REVISIONS:

NO.	DATE	TITLE
1	09/18/2026	PEER REVIEW COMMENT RESPONSE

ISSUE TITLE AND DATE:
PERMIT DRAWINGS
7/20/2026

COPYRIGHT © 2026 by Dore & Whittier Architects, Inc. (D+W). These documents are D+W's instruments of service and as such, D+W retains all copyrights, common law, and statutory rights. Use of these documents without D+W's express written permission will result in copyright infringement.

KEY PLAN



ORIENTATION AND SCALE:

PROJECT NORTH

18"X24" HALF-SIZE PRINT
SCALE: 1/16"=1'-0" GRAPHIC SCALE

36"X48" FULL-SIZE PRINT
SCALE: 1/8"=1'-0" GRAPHIC SCALE

SHEET TITLE:
LEVEL 2 & MEZZANINE - AREA A

SHEET NUMBER:
A1.21

Autodesk Docs://Medway Municipal Complex/ARCH - 867 - MEDWAY MUNICIPAL COMPLEX.rvt
9/17/2026 9:34:03 PM

PLAN GENERAL NOTES

1. ALL INTERIOR CMU PARTITIONS ARE TYPE "E", UNLESS NOTED OTHERWISE. ALL INTERIOR STUD PARTITIONS ARE TYPE "A", UNLESS NOTED OTHERWISE.
2. WHERE DOORS, WINDOWS, BORROWED LITES, GRILLES, OR OPENINGS OCCUR IT SHALL BE ASSUMED THAT THE WALL CONSTRUCTION IS THE SAME ABOVE AS ADJACENT, UNLESS NOTED OTHERWISE.
3. WHERE COLUMN LINES ARE SHOWN INSIDE WALLS AND PARALLEL TO THE WALL, IT SHALL BE ASSUMED THAT THE WALL IS CENTERED ON THE COLUMN LINE UNLESS DIMENSIONED OTHERWISE.
4. WHERE ENLARGED PLANS ARE INDICATED, REFER TO ENLARGED PLAN SHEET FOR DIMENSIONS, WALL TYPES, AND DETAIL REFERENCES.
5. REFER TO HORIZONTAL CONTROL PLANS AND STRUCTURAL DRAWINGS FOR SLAB INFORMATION (INCLUDING DEPRESSIONS, EDGE DIMENSIONS, AND SHAFT OPENINGS).



A27 LEVEL 2 - B
1/8" = 1'-0"

DORE + WHITTIER

MASSACHUSETTS
260 MERRIMAC STREET BUILDING 7, 2ND FLOOR
NEWBURYPORT, MA 01950
P: (978) 499-2999

VERMONT
212 BATTERY STREET
BURLINGTON, VT 05401
P: (802) 863-1428

MEDWAY MUNICIPAL COMPLEX

120 Main Street
Medway Massachusetts 02053

PROJECT NUMBER: 25-0867

SEAL AND SIGNATURE:

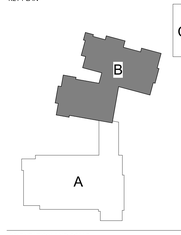
REVISIONS:

NO.	DATE	TITLE
1	09/16/2026	PEER REVIEW COMMENT RESPONSE

ISSUE TITLE AND DATE:
PERMIT DRAWINGS
7/20/2026

COPYRIGHT © 2026 by Dore & Whittier Architects, Inc. (D+W). These documents are D+W's instruments of service and as such, D+W retains all copyrights, common law, and statutory rights. Use of these documents without D+W's express written permission will result in copyright infringement.

KEY PLAN



ORIENTATION AND SCALE:

PROJECT NORTH

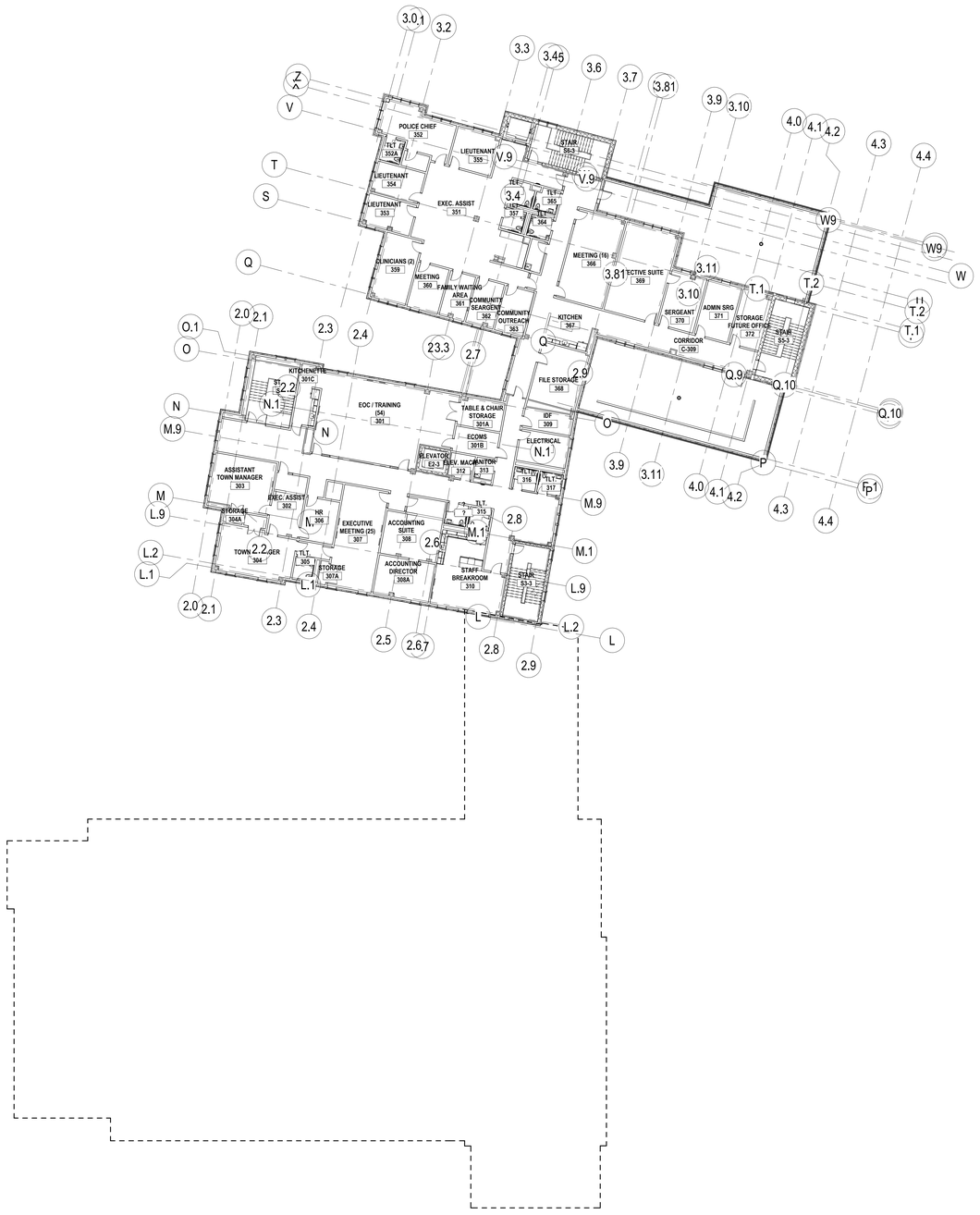
18"X24" HALF-SIZE PRINT
SCALE: 1/16"=1'-0" GRAPHIC SCALE

36"X48" FULL-SIZE PRINT
SCALE: 1/8"=1'-0" GRAPHIC SCALE

SHEET TITLE:
LEVEL 2 - AREA B

SHEET NUMBER:
A1.22

Autodesk Docs://Medway Municipal Complex/ARCH - 867 - MEDWAY MUNICIPAL COMPLEX.rvt
9/17/2026 9:34:08 PM



A22 LEVEL 3 OVERALL
1/16" = 1'-0"

DORE + WHITTIER

MASSACHUSETTS
260 MERRIMAC STREET BUILDING 7, 2ND FLOOR
NEWBURYPORT, MA 01950
P: (978) 499-2999

VERMONT
212 BATTERY STREET
BURLINGTON, VT 05401
P: (802) 863-1428

MEDWAY MUNICIPAL COMPLEX

120 Main Street
Medway Massachusetts 02053

PROJECT NUMBER: 25-0867

SEAL AND SIGNATURE:

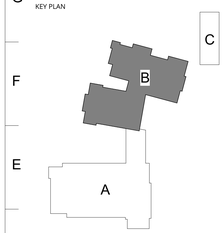
REVISIONS:

NO.	DATE	TITLE
1	09/18/2026	PEER REVIEW COMMENT RESPONSE

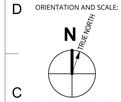
ISSUE TITLE AND DATE:
PERMIT DRAWINGS
7/20/2026

COPYRIGHT © 2026 by Dore & Whittier Architects, Inc. (D+W). These documents are D+W's instruments of service and as such, D+W retains all copyrights, common law, and statutory rights. Use of these documents without D+W's express written permission will result in copyright infringement.

KEY PLAN



ORIENTATION AND SCALE:



18"X24" HALF-SIZE PRINT
0 16' 32' 64'
SCALE: 1/32"=1'-0" GRAPHIC SCALE

36"X48" FULL-SIZE PRINT
0 8' 16' 32'
SCALE: 1/16"=1'-0" GRAPHIC SCALE

SHEET TITLE:
LEVEL 3 OVERALL PLAN

SHEET NUMBER:
A1.30

PLAN GENERAL NOTES

1. ALL INTERIOR CMU PARTITIONS ARE TYPE "E", UNLESS NOTED OTHERWISE. ALL INTERIOR STUD PARTITIONS ARE TYPE "A", UNLESS NOTED OTHERWISE.
2. WHERE DOORS, WINDOWS, BORROWED LITES, GRILLES, OR OPENINGS OCCUR IT SHALL BE ASSUMED THAT THE WALL CONSTRUCTION IS THE SAME ABOVE AS ADJACENT, UNLESS NOTED OTHERWISE.
3. WHERE COLUMN LINES ARE SHOWN INSIDE WALLS AND PARALLEL TO THE WALL, IT SHALL BE ASSUMED THAT THE WALL IS CENTERED ON THE COLUMN LINE UNLESS DIMENSIONED OTHERWISE.
4. WHERE ENLARGED PLANS ARE INDICATED, REFER TO ENLARGED PLAN SHEET FOR DIMENSIONS, WALL TYPES, AND DETAIL REFERENCES.
5. REFER TO HORIZONTAL CONTROL PLANS AND STRUCTURAL DRAWINGS FOR SLAB INFORMATION (INCLUDING DEPRESSIONS, EDGE DIMENSIONS, AND SHAFT OPENINGS).

EQUIPMENT PLATFORM 401

EQUIPMENT PLATFORM 402

A27 EQUIPMENT PLATFORM
1/8" = 1'-0"

DORE + WHITTIER

MASSACHUSETTS
260 MERRIMAC STREET BUILDING 7, 2ND FLOOR
NEWBURYPORT, MA 01950
P: (978) 499-2999

VERMONT
212 BATTERY STREET
BURLINGTON, VT 05401
P: (802) 863-1428

MEDWAY MUNICIPAL COMPLEX

120 Main Street
Medway Massachusetts 02053

PROJECT NUMBER: 25-0867

SEAL AND SIGNATURE:

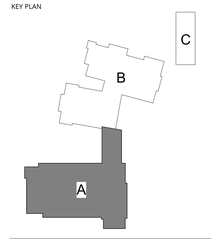
REVISIONS:

NO.	DATE	TITLE
1	09/18/2026	PEER REVIEW COMMENT RESPONSE

ISSUE TITLE AND DATE:
PERMIT DRAWINGS
7/20/2026

COPYRIGHT © 2026 by Dore & Whittier Architects, Inc. (D+W). These documents are D+W's instruments of service and, as such, D+W retains all copyrights, common law, and statutory rights. Use of these documents without D+W's express written permission will result in copyright infringement.

KEY PLAN



ORIENTATION AND SCALE:



18"X24" HALF-SIZE PRINT
0 8' 16' 32'
SCALE: 1/16"=1'-0" GRAPHIC SCALE

36"X48" FULL-SIZE PRINT
0 4' 8' 16'
SCALE: 1/8"=1'-0" GRAPHIC SCALE

SHEET TITLE:
EQUIP. PLATFORM - AREA A

SHEET NUMBER:
A1.31

Autodesk Docs://Medway Municipal Complex/ARCH - 867 - MEDWAY MUNICIPAL COMPLEX.rvt
9/17/2026 9:34:15 PM

PLAN GENERAL NOTES

1. ALL INTERIOR CMU PARTITIONS ARE TYPE "E", UNLESS NOTED OTHERWISE. ALL INTERIOR STUD PARTITIONS ARE TYPE "A", UNLESS NOTED OTHERWISE.
2. WHERE DOORS, WINDOWS, BORROWED LITES, GRILLES, OR OPENINGS OCCUR IT SHALL BE ASSUMED THAT THE WALL CONSTRUCTION IS THE SAME ABOVE AS ADJACENT, UNLESS NOTED OTHERWISE.
3. WHERE COLUMN LINES ARE SHOWN INSIDE WALLS AND PARALLEL TO THE WALL, IT SHALL BE ASSUMED THAT THE WALL IS CENTERED ON THE COLUMN LINE UNLESS DIMENSIONED OTHERWISE.
4. WHERE ENLARGED PLANS ARE INDICATED, REFER TO ENLARGED PLAN SHEET FOR DIMENSIONS, WALL TYPES, AND DETAIL REFERENCES.
5. REFER TO HORIZONTAL CONTROL PLANS AND STRUCTURAL DRAWINGS FOR SLAB INFORMATION (INCLUDING DEPRESSIONS, EDGE DIMENSIONS, AND SHAFT OPENINGS).



A27 LEVEL 3 - B
1/8" = 1'-0"

DORE + WHITTIER

MASSACHUSETTS
260 MERRIMAC STREET BUILDING 7, 2ND FLOOR
NEWBURYPORT, MA 01950
P: (978) 499-2999

VERMONT
212 BATTERY STREET
BURLINGTON, VT 05401
P: (802) 863-1428

MEDWAY MUNICIPAL COMPLEX

120 Main Street
Medway Massachusetts 02053

PROJECT NUMBER: 25-0867

SEAL AND SIGNATURE:

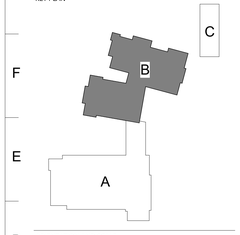
REVISIONS:

NO.	DATE	TITLE
1	09/18/2026	PEER REVIEW COMMENT RESPONSE

ISSUE TITLE AND DATE:
PERMIT DRAWINGS
7/20/2026

COPYRIGHT © 2026 by Dore & Whittier Architects, Inc. (D+W). These documents are D+W's instruments of service and as such, D+W retains all copyrights, common law, and statutory rights. Use of these documents without D+W's express written permission will result in copyright infringement.

KEY PLAN



ORIENTATION AND SCALE:

PROJECT NORTH

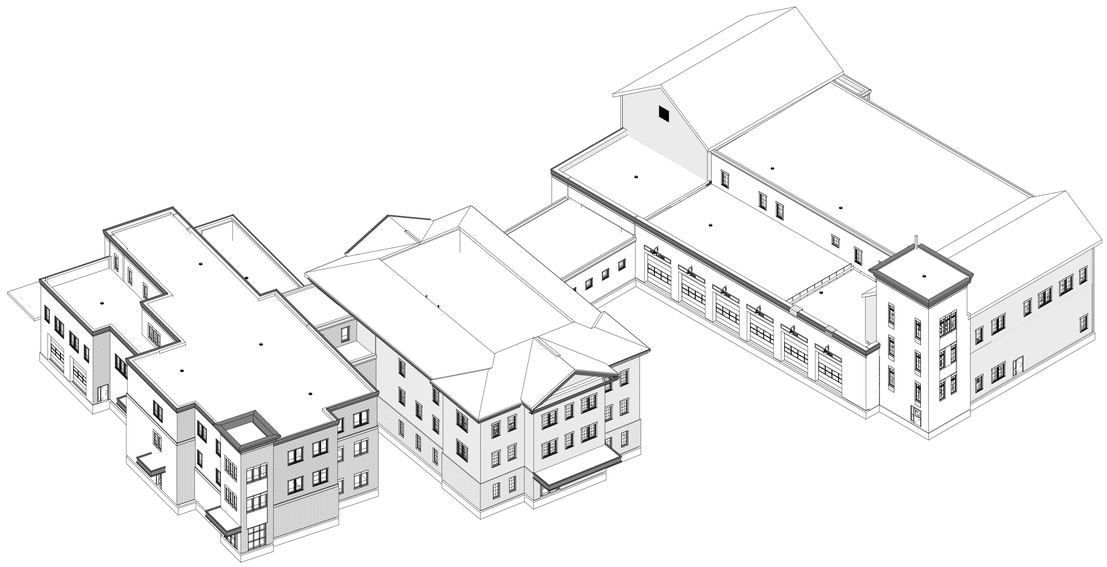
18"X24" HALF-SIZE PRINT
0 8' 16' 32'
SCALE: 1/16"=1'-0" GRAPHIC SCALE

36"X48" FULL-SIZE PRINT
0 4' 8' 16'
SCALE: 1/8"=1'-0" GRAPHIC SCALE

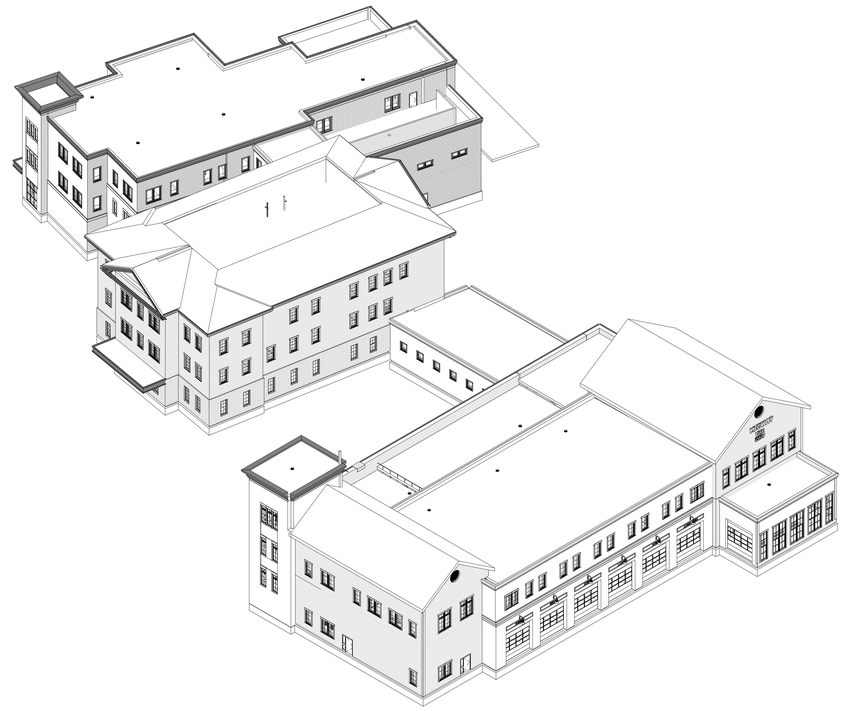
SHEET TITLE:
LEVEL 3 - AREA B

SHEET NUMBER:
A1.32

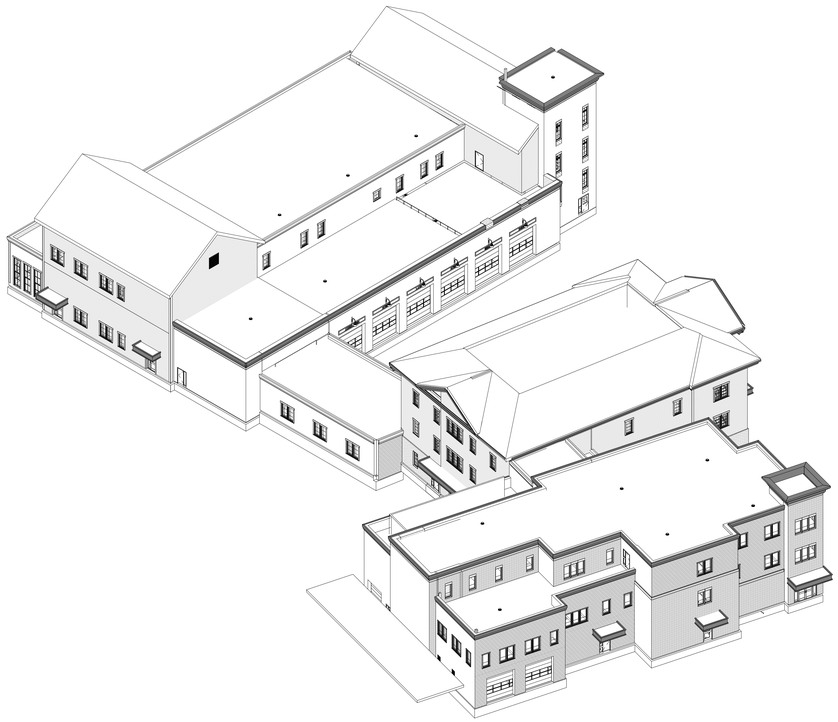
Autodesk Docs://Medway Municipal Complex/ARCH - 867 - MEDWAY MUNICIPAL COMPLEX.rvt
9/17/2026 9:34:20 PM



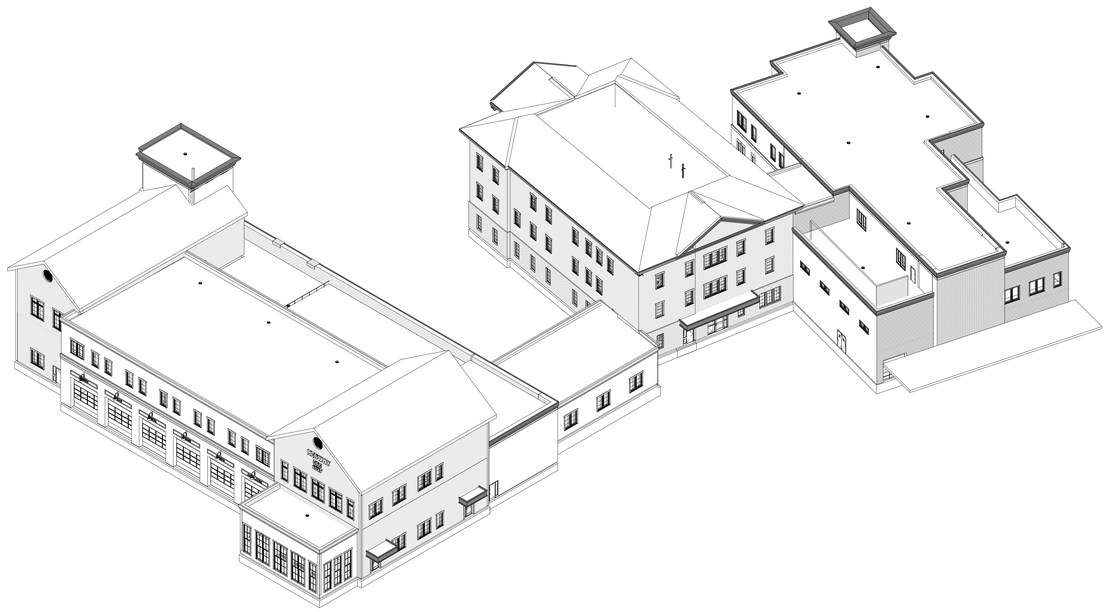
M27 AXON - NORTHWEST



M12 AXON - SOUTHWEST



A27 AXON - NORTHEAST



A15 AXON - SOUTHEAST

DORE + WHITTIER

MASSACHUSETTS
260 MERRIMAC STREET BUILDING 7, 2ND FLOOR
NEWBURYPORT, MA 01950
P: (978) 499-2999

VERMONT
212 BATTERY STREET
BURLINGTON, VT 05401
P: (802) 863-1428

MEDWAY MUNICIPAL COMPLEX

120 Main Street
Medway Massachusetts 02053

PROJECT NUMBER: 25-0867

SEAL AND SIGNATURE:

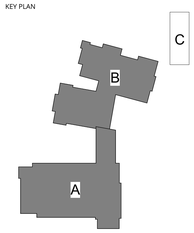
REVISIONS:

NO.	DATE	TITLE
1	09/18/2026	PEER REVIEW COMMENT RESPONSE

ISSUE TITLE AND DATE:
PERMIT DRAWINGS
7/20/2026

COPYRIGHT © 2026 by Dore & Whittier Architects, Inc. (D+W). These documents are D+W's instruments of service and as such, D+W retains all copyrights, common law, and statutory rights. Use of these documents without D+W's express written permission will result in copyright infringement.

KEY PLAN

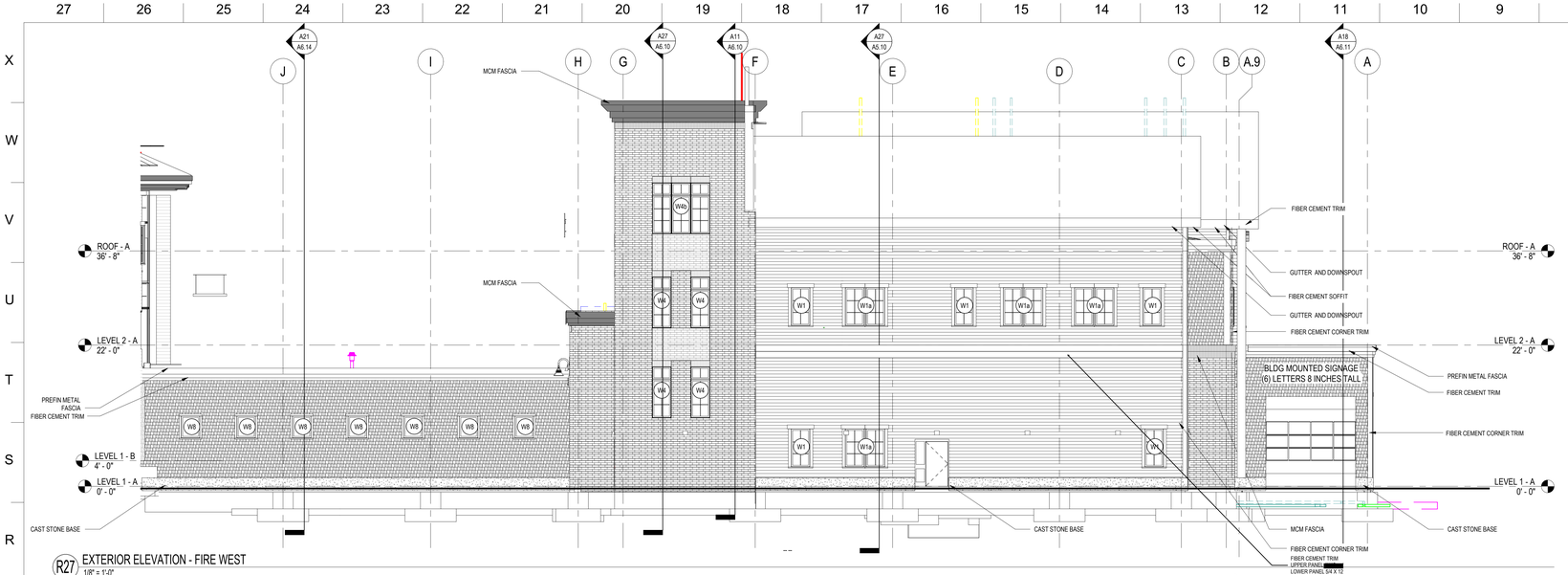


ORIENTATION AND SCALE:

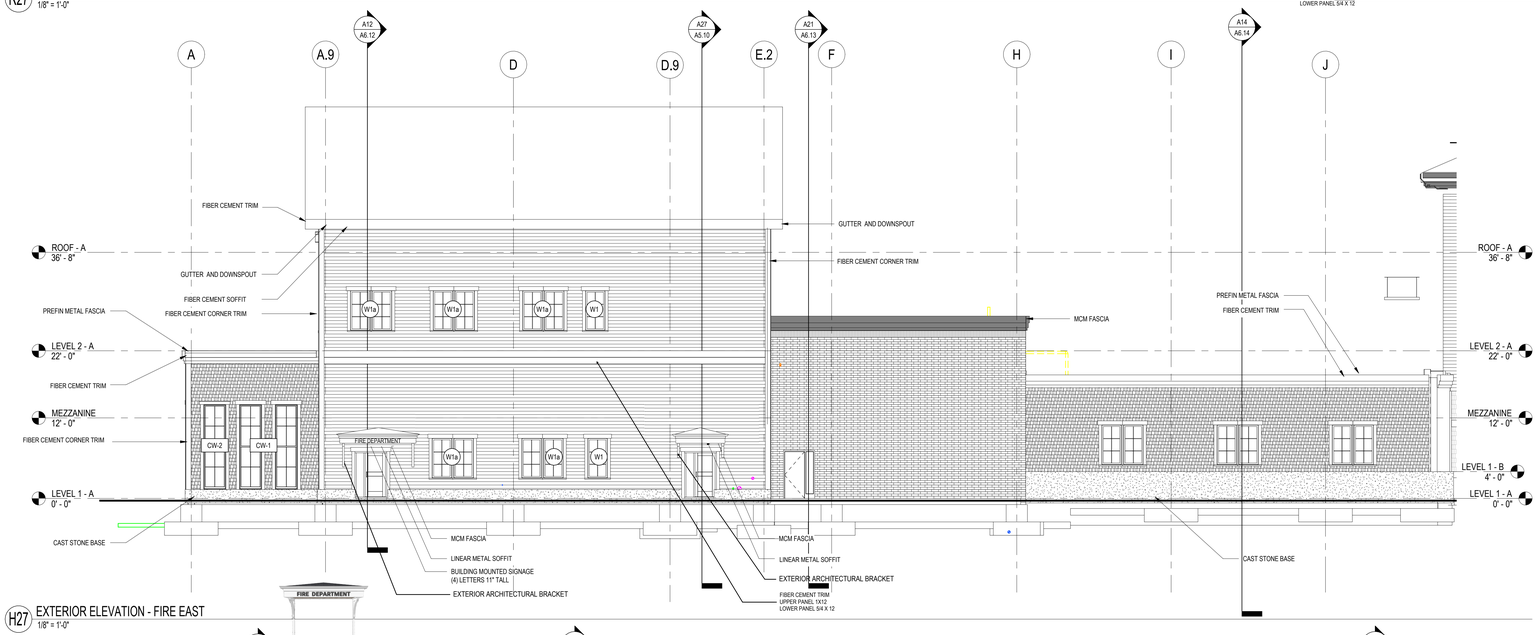
SHEET TITLE:
AXONOMETRIC VIEWS

SHEET NUMBER:
A4.00

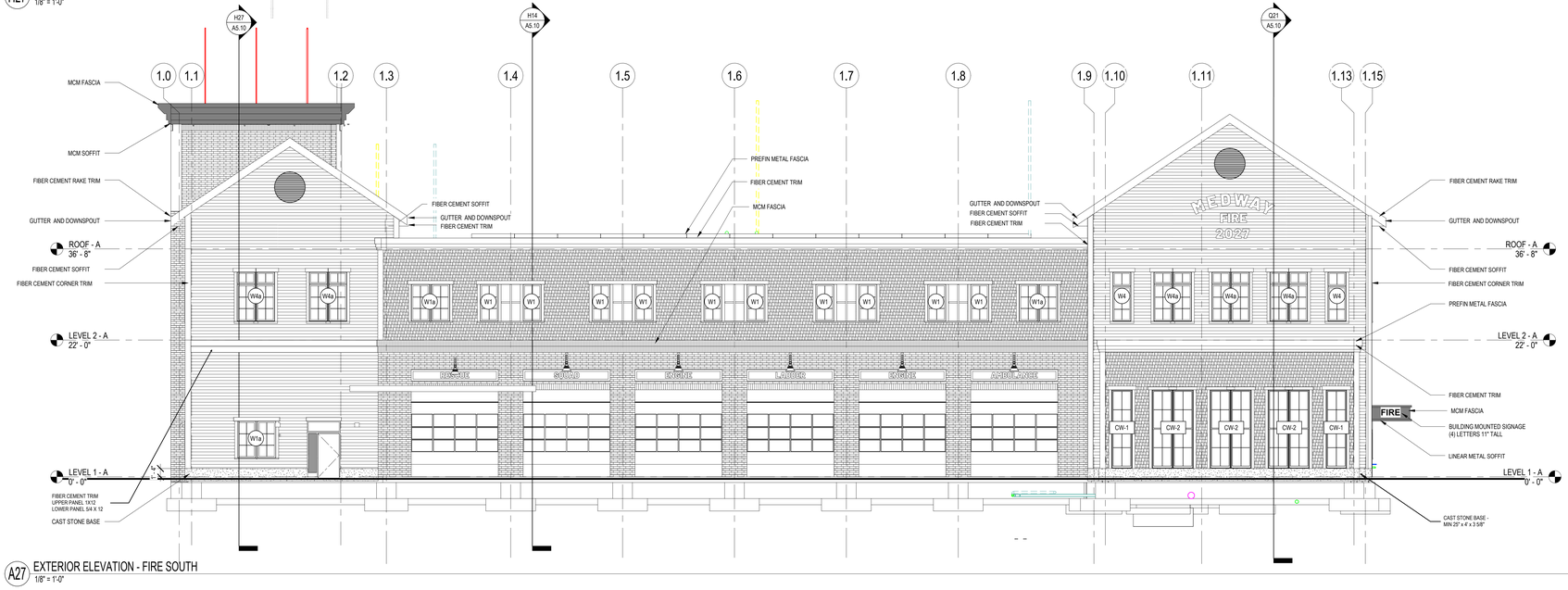
Autodesk Docs://Medway Municipal Complex/ARCH - 667 - MEDWAY MUNICIPAL COMPLEX.rvt
9/17/2026 9:38:26 PM



R27 EXTERIOR ELEVATION - FIRE WEST
1/8" = 1'-0"



H27 EXTERIOR ELEVATION - FIRE EAST
1/8" = 1'-0"



A27 EXTERIOR ELEVATION - FIRE SOUTH
1/8" = 1'-0"

EXTERIOR ELEVATION GENERAL NOTES

1. EXTERIOR ELEVATIONS ARE PROVIDED TO SHOW THE GENERAL ARRANGEMENT OF EXTERIOR WALL FINISH MATERIALS. REFER TO WALL SECTIONS AND DETAILS FOR DETAILED DESCRIPTION OF CONSTRUCTION.
2. LINE OF GRADE INDICATED IS APPROXIMATE – REFER TO CIVIL / LANDSCAPE GRADING PLANS FOR GRADING INFORMATION.
3. WHERE PORTIONS OF ELEVATIONS ARE OBSCURED FROM VIEW BY FREESTANDING COLUMNS, FASCIA, ROOF EDGES, OR OTHER PROJECTING CONSTRUCTION, THE CONTRACTOR SHALL ASSUME THAT THE ADJACENT WALL FINISHES EXTEND INTO THE AREAS OBSCURED FROM VIEW, UNLESS SPECIFICALLY INDICATED AS OTHERWISE IN BUILDING AND WALL SECTIONS.
4. DIMENSIONAL INFORMATION PROVIDED RELATIVE TO MASONRY VENEER IS BASED ON NOMINAL FULL INCH MASONRY COURSING.
5. REFER TO ROOF PLAN FOR DESCRIPTION OF ROOFING SYSTEMS AND MATERIALS.
6. REFER TO CURTAIN-WALL TYPES AND DETAILS FOR INFORMATION RELATED TO CURTAIN-WALL, GLAZING TYPES, INSTALLATION, AND TRIM AT OPENINGS.
7. REFER TO WINDOW TYPES AND DETAILS FOR INFORMATION RELATED TO WINDOWS, OPERABLE SASH, GLAZING TYPES, INSTALLATION, AND TRIM AT OPENINGS.
8. REFER TO LOUVER TYPES AND DETAILS FOR INFORMATION RELATED TO LOUVER OPENINGS, SIZES, INSTALLATION, AND TRIM AT OPENINGS.
9. REFER TO BUILDING AND WALL SECTIONS FOR HEIGHT OF MASONRY COURSING AND TOP OF MASONRY ELEVATIONS.
10. PROVIDE MASONRY VENEER CONTROL JOINTS WHERE INDICATED IN ELEVATIONS. IN ADDITION, PROVIDE CONTROL JOINTS AT THE FOLLOWING LOCATIONS:
    a. ON ONE SIDE OF AN OUTWARD BUILDING CORNER WITHIN 2 '-4" OF THE CORNER.
    b. AT EACH INWARD BUILDING CORNER.
    c. WHERE THE HEIGHT OF THE FACADE MASONRY VENEER CHANGES.
    d. WHERE THE METHOD OF SUPPORT FOR MASONRY VENEER CHANGES, SUCH AS AT ENDS OF RELIEVING ANGLES OR STRUCTURAL LINTELS SUPPORTED FROM ROOF STRUCTURE.
    e. ON UNINTERRUPTED SPANS OF MASONRY VENEER AT MAXIMUM 24 '-0" SPACING.
11. SEALANT AND BACKER ROD AT MASONRY VENEER CONTROL JOINTS SHALL BE PROVIDED AND INSTALLED BY THE WATERPROOFING / JOINT SEALANT SUB-CONTRACTOR.
12. WHERE LOOSE LINTELS CROSS CONTROL JOINTS, PROVIDE BOND-BREAK FABRIC WRAP OF LINTEL END AT PORTION OF LINTEL EXTENDING PAST CONTROL JOINT.
13. WHERE MASONRY VENEER MATERIAL CHANGES OCCUR, INCLUDING FROM BRICK TO CMU OR PRECAST CONCRETE, PROVIDE A BOND BREAK SEPARATOR BETWEEN COURSES.
14. ELEVATIONS MAY NOT SHOW ALL BUILDING FEATURES WITH CLARITY, SUCH AS REGLET COUNTER-FLASHINGS AND TERMINATION BARS WHERE ROOF MEMBRANE FLASHINGS TERMINATE ON SIDE WALLS. REFER TO WALL SECTION AND ROOF EDGE DETAILS FOR DETAILS AND INFORMATION RELATED TO THESE CONDITIONS.
15. PAINT ALL EXPOSED LINTELS TO MATCH ADJACENT WALL.

EXTERIOR ELEVATION SYMBOLS LEGEND

- CAM — CAMERA; SEE SECURITY DWGS
- SPK — SPEAKER; SEE COMMUNICATION DWGS
- CR — CARD READER; SEE TECHNOLOGY DWGS
- A1 — VIDEO INTERCOM; SEE TECHNOLOGY DWGS
- D — VIDEO INTERCOM; SEE TECHNOLOGY DWGS
- H/S — FIRE ALARM HORN/ STROBE; SEE FIRE ALARM DWGS
- FA — RED FIRE ALARM BEACON; SEE FIRE ALARM DWGS
- SE — AMBER SECURITY BEACON; SEE FIRE ALARM AND TECHNOLOGY DRAWINGS
- SP — SPRINKLER ALARM BEACON AND BELL; SEE FIRE ALARM DWGS
- H — HOSE BIB; SEE PLUMBING DWGS
- PENDANT MOUNT LIGHT FIXTURE, SEE ELEC. DWGS. LOCATE SL4 AT 8'-0" ABOVE LEVEL 1 TO B.O. FIXTURE. LOCATE SL5 AT 14'-0" ABOVE LEVEL 1 TO B.O. FIXTURE.
- WALL SCONCE LIGHT FIXTURE, SEE ELEC. DWGS. LOCATE LEVEL 1 SC1 AT 7'-8" ABOVE LEVEL 1 TO B.O. FIXTURE. LOCATE LEVEL 2 SC-1 AT 4'-0" ABOVE LEVEL 2 TO B.O. FIXTURE
- EXTENT OF BRICK VENEER PROJECTING BEYOND THE DATUM FACE OF BRICK VENEER PLANE. SEE PROJECT DETAILS AND SPECIAL BRICK SHAPES FOR ASSEMBLIES

ELEVATION SYMBOLS LEGEND

- CAM — CAMERA; SEE SECURITY DWGS
- SPK — SPEAKER; SEE COMMUNICATION DWGS
- CR — CARD READER; SEE TECHNOLOGY DWGS
- A1 — VIDEO INTERCOM; SEE TECHNOLOGY DWGS
- DO — DOOR OPENER; SEE SECURITY DWGS
- H/S — FIRE ALARM HORN/STROBE; SEE FIRE ALARM DWGS
- FA — RED FIRE ALARM BEACON; SEE FIRE ALARM DWGS
- SEC — AMBER SECURITY BEACON; SEE FIRE ALARM AND TECHNOLOGY DRAWINGS
- SPR — SPRINKLER ALARM BEACON AND BELL; SEE FIRE ALARM DWGS
- H — HOSE BIB; SEE PLUMBING DWGS
- PENDANT MOUNT LIGHT FIXTURE, SEE ELEC. DWGS. LOCATE SL4 AT 8'-0" ABOVE LEVEL 1 TO B.O. FIXTURE. LOCATE SL5 AT 14'-0" ABOVE LEVEL 1 TO B.O. FIXTURE.
- WALL SCONCE LIGHT FIXTURE, SEE ELEC. DWGS. LOCATE LEVEL 1 SC1 AT 7'-8" ABOVE LEVEL 1 TO B.O. FIXTURE. LOCATE LEVEL 2 SC-1 AT 4'-0" ABOVE LEVEL 2 TO B.O. FIXTURE
- EXTENT OF BRICK VENEER PROJECTING BEYOND THE DATUM FACE OF BRICK VENEER PLANE. SEE PROJECT DETAILS AND SPECIAL BRICK SHAPES FOR ASSEMBLIES

EXTERIOR MATERIALS LEGEND

- BRICK VENEER
- COMPOSITE SIDING
- COMPOSITE SHINGLE
- METAL PANEL / MCM PANEL
- CAST STONE
- CORRUGATED METAL PANEL (SIDING AND EQUIPMENT SCREENS)
- ALUMINUM DIAMOND PLATE
- VISION PANEL - OPERABLE

DORE + WHITTIER

MASSACHUSETTS
260 MERRIMAC STREET BUILDING 7, 2ND FLOOR
NEWBURYPORT, MA 01950
P; (978) 499-2999

VERMONT
212 BATTERY STREET
BURLINGTON, VT 05401
P: (802) 863-1428

MEDWAY MUNICIPAL COMPLEX

120 Main Street
Medway Massachusetts 02053

PROJECT NUMBER: 25-0867

SEAL AND SIGNATURE:

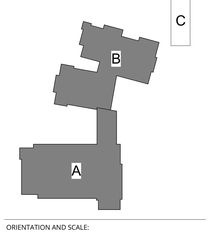
REVISIONS:

NO.	DATE	TITLE
1	09/18/2026	PEER REVIEW COMMENT RESPONSE

ISSUE TITLE AND DATE:
PERMIT DRAWINGS
7/20/2026

COPYRIGHT © 2026 by Dore & Whittier Architects, Inc. (D+W). These documents are D+W's instruments of service and as such, D+W retains all copyrights, common law, and statutory rights. Use of these documents without D+W's express written permission will result in copyright infringement.

KEY PLAN



ORIENTATION AND SCALE:

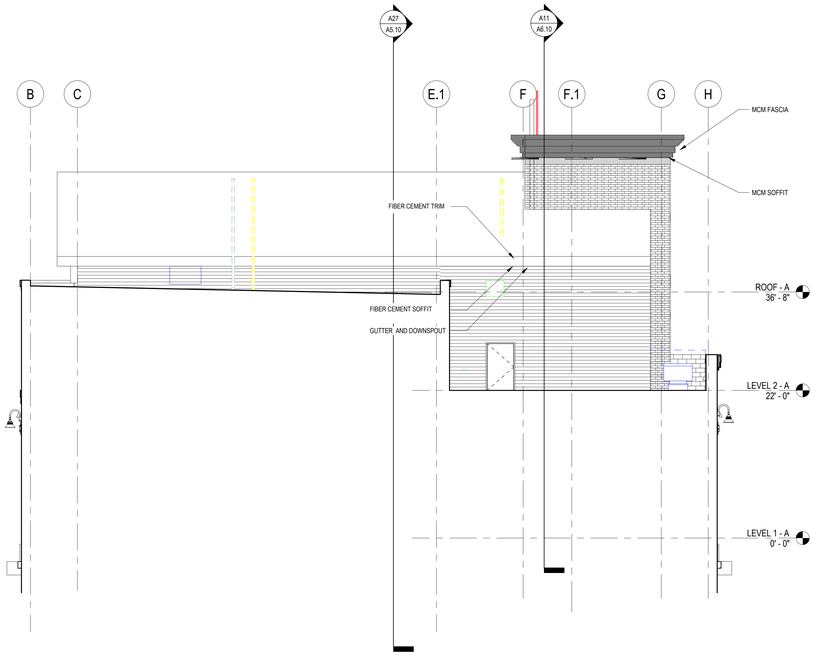
18"X24" HALF-SIZE PRINT
0 8' 16' 32'
SCALE: 1/16"=1'-0" GRAPHIC SCALE

36"X48" FULL-SIZE PRINT
0 4' 8' 16'
SCALE: 1/8"=1'-0" GRAPHIC SCALE

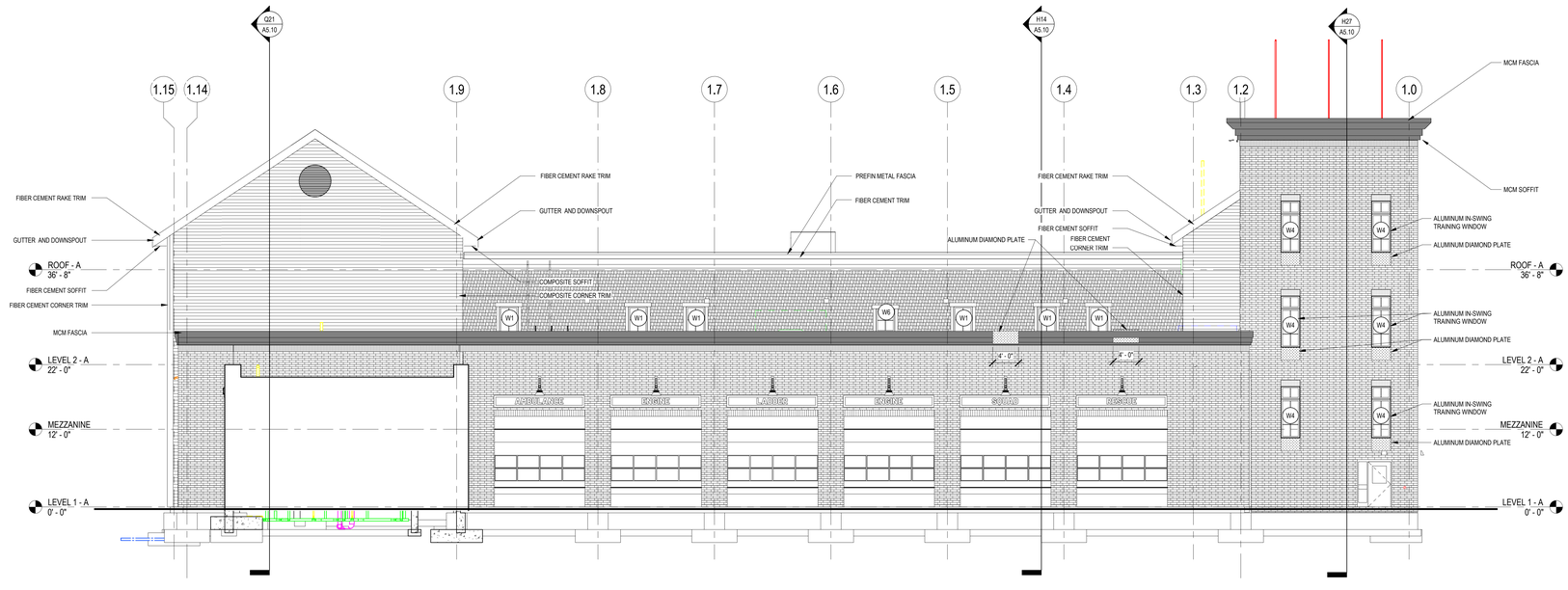
SHEET TITLE:
EXTERIOR ELEVATIONS

SHEET NUMBER:
A4.11

Autodesk Docs://Medway Municipal Complex/ARCH - 867 - MEDWAY MUNICIPAL COMPLEX.rvt
9/17/2026 9:38:59 PM



J16 EXTERIOR ELEVATION - FIRE EAST 2
1/8" = 1'-0"



A27 EXTERIOR ELEVATION - FIRE NORTH
1/8" = 1'-0"

EXTERIOR ELEVATION GENERAL NOTES

1. EXTERIOR ELEVATIONS ARE PROVIDED TO SHOW THE GENERAL ARRANGEMENT OF EXTERIOR WALL FINISH MATERIALS. REFER TO WALL SECTIONS AND DETAILS FOR DETAILED DESCRIPTION OF CONSTRUCTION.
2. LINE OF GRADE INDICATED IS APPROXIMATE – REFER TO CIVIL / LANDSCAPE GRADING PLANS FOR GRADING INFORMATION.
3. WHERE PORTIONS OF ELEVATIONS ARE OBSCURED FROM VIEW BY FREESTANDING COLUMNS, FASCIA, ROOF EDGES, OR OTHER PROJECTING CONSTRUCTION, THE CONTRACTOR SHALL ASSUME THAT THE ADJACENT WALL FINISHES EXTEND INTO THE AREAS OBSCURED FROM VIEW, UNLESS SPECIFICALLY INDICATED AS OTHERWISE IN BUILDING AND WALL SECTIONS.
4. DIMENSIONAL INFORMATION PROVIDED RELATIVE TO MASONRY VENEER IS BASED ON NOMINAL FULL INCH MASONRY COURSING.
5. REFER TO ROOF PLAN FOR DESCRIPTION OF ROOFING SYSTEMS AND MATERIALS.
6. REFER TO CURTAIN-WALL TYPES AND DETAILS FOR INFORMATION RELATED TO CURTAIN-WALL, GLAZING TYPES, INSTALLATION, AND TRIM AT OPENINGS.
7. REFER TO WINDOW TYPES AND DETAILS FOR INFORMATION RELATED TO WINDOWS, OPERABLE SASH, GLAZING TYPES, INSTALLATION, AND TRIM AT OPENINGS.
8. REFER TO LOUVER TYPES AND DETAILS FOR INFORMATION RELATED TO LOUVER OPENINGS, SIZES, INSTALLATION, AND TRIM AT OPENINGS.
9. REFER TO BUILDING AND WALL SECTIONS FOR HEIGHT OF MASONRY COURSING AND TOP OF MASONRY ELEVATIONS.
10. PROVIDE MASONRY VENEER CONTROL JOINTS WHERE INDICATED IN ELEVATIONS. IN ADDITION, PROVIDE CONTROL JOINTS AT THE FOLLOWING LOCATIONS:
    a. ON ONE SIDE OF AN OUTWARD BUILDING CORNER WITHIN 2 '-4" OF THE CORNER.
    b. AT EACH INWARD BUILDING CORNER.
    c. WHERE THE HEIGHT OF THE FACADE MASONRY VENEER CHANGES.
    d. WHERE THE METHOD OF SUPPORT FOR MASONRY VENEER CHANGES, SUCH AS AT ENDS OF RELIEVING ANGLES OR STRUCTURAL LINTELS SUPPORTED FROM ROOF STRUCTURE.
    e. ON UNINTERRUPTED SPANS OF MASONRY VENEER AT MAXIMUM 24 '-0" SPACING.
11. SEALANT AND BACKER ROD AT MASONRY VENEER CONTROL JOINTS SHALL BE PROVIDED AND INSTALLED BY THE WATERPROOFING / JOINT SEALANT SUB-CONTRACTOR.
12. WHERE LOOSE LINTELS CROSS CONTROL JOINTS, PROVIDE BOND-BREAK FABRIC WRAP OF LINTEL END AT PORTION OF LINTEL EXTENDING PAST CONTROL JOINT.
13. WHERE MASONRY VENEER MATERIAL CHANGES OCCUR, INCLUDING FROM BRICK TO CMU OR PRECAST CONCRETE, PROVIDE A BOND BREAK SEPARATOR BETWEEN COURSES.
14. ELEVATIONS MAY NOT SHOW ALL BUILDING FEATURES WITH CLARITY, SUCH AS REGLET COUNTER-FLASHINGS AND TERMINATION BARS WHERE ROOF MEMBRANE FLASHINGS TERMINATE ON SIDE WALLS. REFER TO WALL SECTION AND ROOF EDGE DETAILS FOR DETAILS AND INFORMATION RELATED TO THESE CONDITIONS.
15. PAINT ALL EXPOSED LINTELS TO MATCH ADJACENT WALL.

EXTERIOR ELEVATION SYMBOLS LEGEND

- CAM — CAMERA; SEE SECURITY DWGS
- SPK — SPEAKER; SEE COMMUNICATION DWGS
- CR — CARD READER; SEE TECHNOLOGY DWGS
- A1 — VIDEO INTERCOM; SEE TECHNOLOGY DWGS
- DO — VIDEO INTERCOM; SEE TECHNOLOGY DWGS
- PENDANT MOUNT LIGHT FIXTURE, SEE ELEC. DWGS. LOCATE SL5 AT 14'-0" ABOVE LEVEL 1 TO B.O. FIXTURE. LOCATE SL5 AT 14'-0" ABOVE LEVEL 1 TO B.O. FIXTURE.
- WALL SCONCE LIGHT FIXTURE, SEE ELEC. DWGS. LOCATE LEVEL 1 SC1 AT 7'-8" ABOVE LEVEL 1 TO B.O. FIXTURE. LOCATE LEVEL 2 SC-1 AT 4'-0" ABOVE LEVEL 2 TO B.O. FIXTURE
- 3/4" — EXTENT OF BRICK VENEER PROJECTING BEYOND THE DATUM FACE OF BRICK VENEER PLANE. SEE PROJECT DETAILS AND SPECIAL BRICK SHAPES FOR ASSEMBLIES
- H/S — FIRE ALARM HORN/ STROBE; SEE FIRE ALARM DWGS
- FA — RED FIRE ALARM BEACON; SEE FIRE ALARM DWGS
- SEC — AMBER SECURITY BEACON; SEE FIRE ALARM AND TECHNOLOGY DRAWINGS
- SPR — SPRINKLER ALARM BEACON AND BELL; SEE FIRE ALARM DWGS
- H — HOSE BIB; SEE PLUMBING DWGS

ELEVATION SYMBOLS LEGEND

- CAM — CAMERA; SEE SECURITY DWGS
- SPK — SPEAKER; SEE COMMUNICATION DWGS
- CR — CARD READER; SEE TECHNOLOGY DWGS
- A1 — VIDEO INTERCOM; SEE TECHNOLOGY DWGS
- DO — DOOR OPENER; SEE SECURITY DWGS
- H/S — FIRE ALARM HORN/STROBE; SEE FIRE ALARM DWGS
- FA — RED FIRE ALARM BEACON; SEE FIRE ALARM DWGS
- SEC — AMBER SECURITY BEACON; SEE FIRE ALARM AND TECHNOLOGY DRAWINGS
- SPR — SPRINKLER ALARM BEACON AND BELL; SEE FIRE ALARM DWGS
- H — HOSE BIB; SEE PLUMBING DWGS
- PENDANT MOUNT LIGHT FIXTURE, SEE ELEC. DWGS. LOCATE SL4 AT 8'-0" ABOVE LEVEL 1 TO B.O. FIXTURE. LOCATE SL5 AT 14'-0" ABOVE LEVEL 1 TO B.O. FIXTURE.
- WALL SCONCE LIGHT FIXTURE, SEE ELEC. DWGS. LOCATE LEVEL 1 SC1 AT 7'-8" ABOVE LEVEL 1 TO B.O. FIXTURE. LOCATE LEVEL 2 SC-1 AT 4'-0" ABOVE LEVEL 2 TO B.O. FIXTURE
- 3/4" — EXTENT OF BRICK VENEER PROJECTING BEYOND THE DATUM FACE OF BRICK VENEER PLANE. SEE PROJECT DETAILS AND SPECIAL BRICK SHAPES FOR ASSEMBLIES

EXTERIOR MATERIALS LEGEND

- BRICK VENEER
- CAST STONE
- COMPOSITE SIDING
- CORRUGATED METAL PANEL (SIDING AND EQUIPMENT SCREENS)
- COMPOSITE SHINGLE
- ALUMINUM DIAMOND PLATE
- METAL PANEL / MCM PANEL
- VISION PANEL - OPERABLE

DORE + WHITTIER

MASSACHUSETTS
260 MERRIMAC STREET BUILDING 7, 2ND FLOOR
NEWBURYPORT, MA 01950
P; (978) 499-2999

VERMONT
212 BATTERY STREET
BURLINGTON, VT 05401
P: (802) 863-1428

MEDWAY MUNICIPAL COMPLEX

120 Main Street
Medway Massachusetts 02053

PROJECT NUMBER: 25-0867

SEAL AND SIGNATURE:

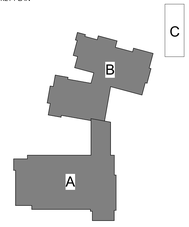
REVISIONS:

NO.	DATE	TITLE
1	09/18/2026	PEER REVIEW COMMENT RESPONSE

ISSUE TITLE AND DATE:
PERMIT DRAWINGS
7/20/2026

COPYRIGHT © 2026 by Dore & Whittier Architects, Inc. (D+W). These documents are D+W's instruments of service and as such, D+W retains all copyrights, common law, and statutory rights. Use of these documents without D+W's express written permission will result in copyright infringement.

KEY PLAN



ORIENTATION AND SCALE:

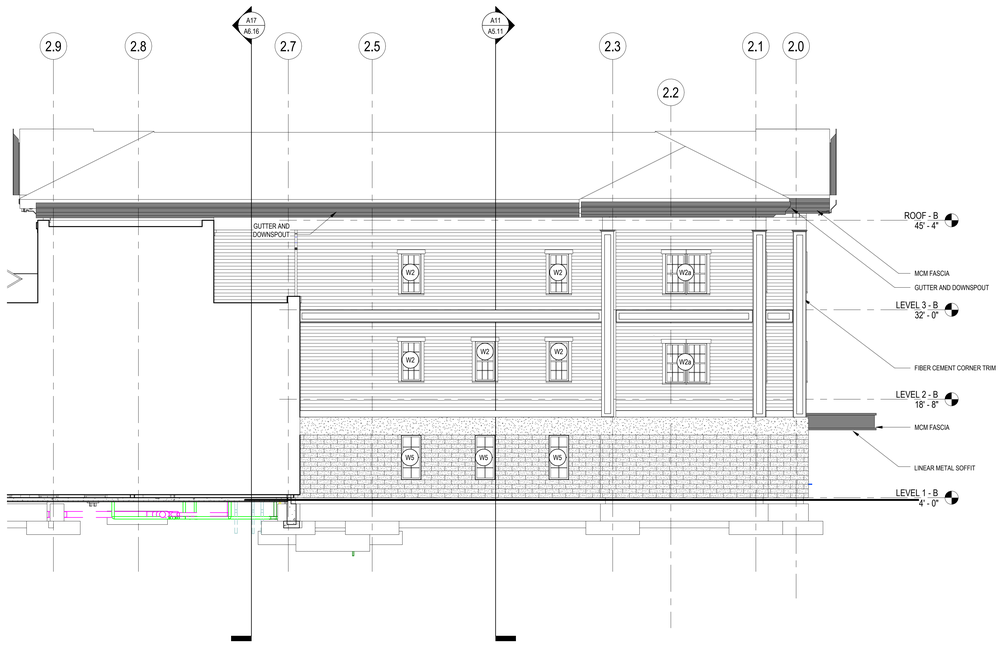
18"X24" HALF-SIZE PRINT
0 8' 16' 32'
SCALE: 1/16"=1'-0" GRAPHIC SCALE

36"X48" FULL-SIZE PRINT
0 4' 8' 16'
SCALE: 1/8"=1'-0" GRAPHIC SCALE

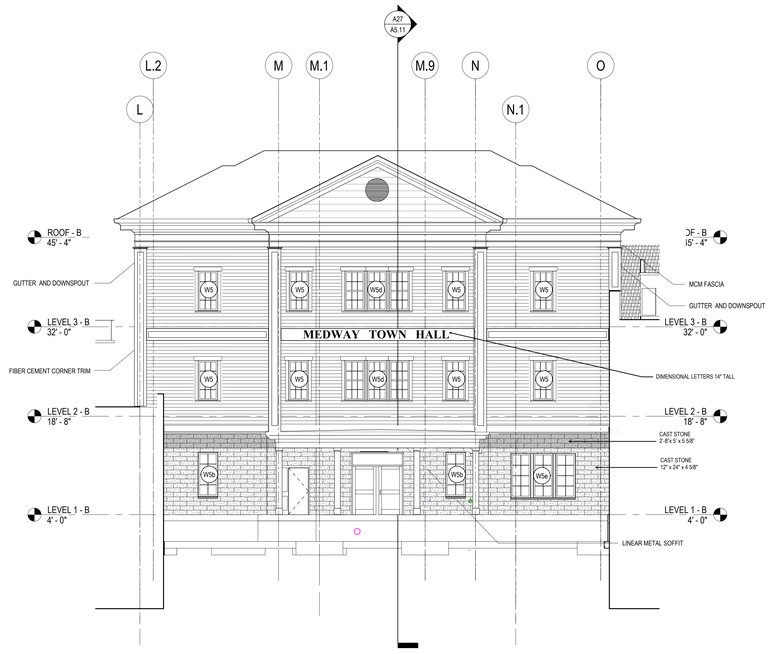
SHEET TITLE:
EXTERIOR ELEVATIONS

SHEET NUMBER:
A4.12

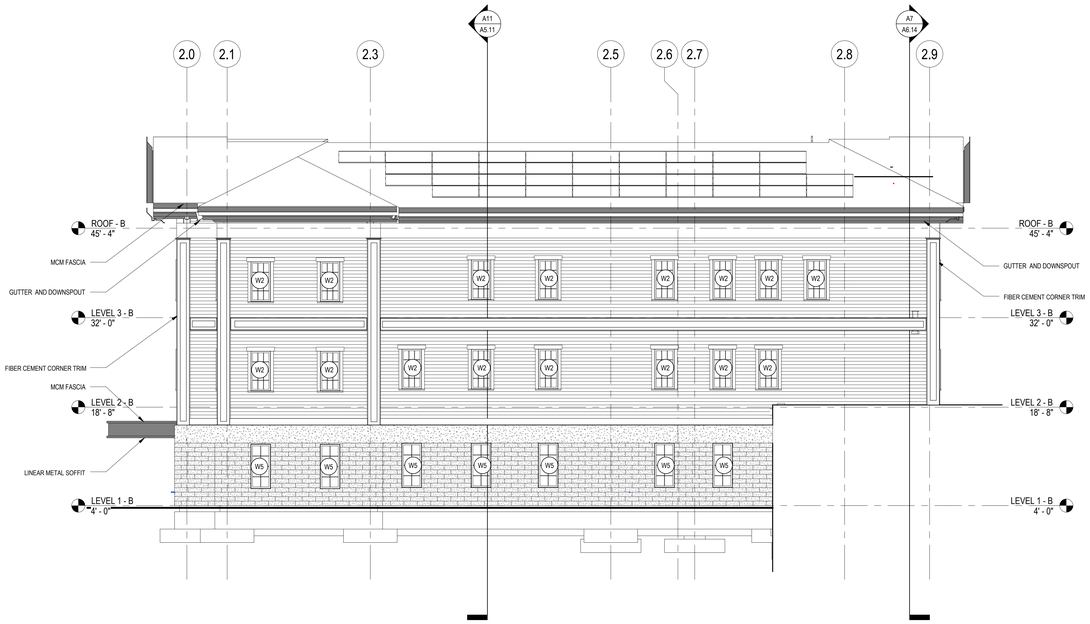
Autodesk Docs://Medway Municipal Complex/ARCH - 867 - MEDWAY MUNICIPAL COMPLEX.rvt
9/17/2026 9:39:19 PM



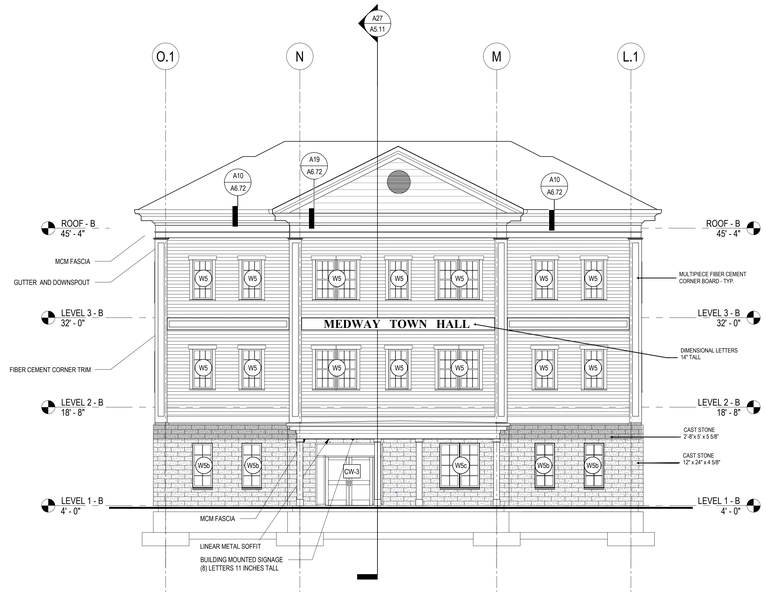
K27 EXTERIOR ELEVATION - TOWN HALL NORTH
1/8" = 1'-0"



K14 EXTERIOR ELEVATION - TOWN HALL EAST
1/8" = 1'-0"



A27 EXTERIOR ELEVATION - TOWN HALL SOUTH
1/8" = 1'-0"



A14 EXTERIOR ELEVATION - TOWN HALL WEST
1/8" = 1'-0"

EXTERIOR ELEVATION GENERAL NOTES

1. EXTERIOR ELEVATIONS ARE PROVIDED TO SHOW THE GENERAL ARRANGEMENT OF EXTERIOR WALL FINISH MATERIALS. REFER TO WALL SECTIONS AND DETAILS FOR DETAILED DESCRIPTION OF CONSTRUCTION.
2. LINE OF GRADE INDICATED IS APPROXIMATE – REFER TO CIVIL / LANDSCAPE GRADING PLANS FOR GRADING INFORMATION.
3. WHERE PORTIONS OF ELEVATIONS ARE OBSCURED FROM VIEW BY FREESTANDING COLUMNS, FASCIA, ROOF EDGES, OR OTHER PROJECTING CONSTRUCTION, THE CONTRACTOR SHALL ASSUME THAT THE ADJACENT WALL FINISHES EXTEND INTO THE AREAS OBSCURED FROM VIEW, UNLESS SPECIFICALLY INDICATED AS OTHERWISE IN BUILDING AND WALL SECTIONS.
4. DIMENSIONAL INFORMATION PROVIDED RELATIVE TO MASONRY VENEER IS BASED ON NOMINAL FULL INCH MASONRY COURSING.
5. REFER TO ROOF PLAN FOR DESCRIPTION OF ROOFING SYSTEMS AND MATERIALS.
6. REFER TO CURTAIN-WALL TYPES AND DETAILS FOR INFORMATION RELATED TO CURTAIN-WALL, GLAZING TYPES, INSTALLATION, AND TRIM AT OPENINGS.
7. REFER TO WINDOW TYPES AND DETAILS FOR INFORMATION RELATED TO WINDOWS, OPERABLE SASH, GLAZING TYPES, INSTALLATION, AND TRIM AT OPENINGS.
8. REFER TO LOUVER TYPES AND DETAILS FOR INFORMATION RELATED TO LOUVER OPENINGS, SIZES, INSTALLATION, AND TRIM AT OPENINGS.
9. REFER TO BUILDING AND WALL SECTIONS FOR HEIGHT OF MASONRY COURSING AND TOP OF MASONRY ELEVATIONS.
10. PROVIDE MASONRY VENEER CONTROL JOINTS WHERE INDICATED IN ELEVATIONS. IN ADDITION, PROVIDE CONTROL JOINTS AT THE FOLLOWING LOCATIONS:
    a. ON ONE SIDE OF AN OUTWARD BUILDING CORNER WITHIN 2 '-4" OF THE CORNER.
    b. AT EACH INWARD BUILDING CORNER.
    c. WHERE THE HEIGHT OF THE FACADE MASONRY VENEER CHANGES.
    d. WHERE THE METHOD OF SUPPORT FOR MASONRY VENEER CHANGES, SUCH AS AT ENDS OF RELIEVING ANGLES OR STRUCTURAL LINTELS SUPPORTED FROM ROOF STRUCTURE.
    e. ON UNINTERRUPTED SPANS OF MASONRY VENEER AT MAXIMUM 24 '-0" SPACING.
11. SEALANT AND BACKER ROD AT MASONRY VENEER CONTROL JOINTS SHALL BE PROVIDED AND INSTALLED BY THE WATERPROOFING / JOINT SEALANT SUB-CONTRACTOR.
12. WHERE LOOSE LINTELS CROSS CONTROL JOINTS, PROVIDE BOND-BREAK FABRIC WRAP OF LINTEL END AT PORTION OF LINTEL EXTENDING PAST CONTROL JOINT.
13. WHERE MASONRY VENEER MATERIAL CHANGES OCCUR, INCLUDING FROM BRICK TO CMU OR PRECAST CONCRETE, PROVIDE A BOND BREAK SEPARATOR BETWEEN COURSES.
14. ELEVATIONS MAY NOT SHOW ALL BUILDING FEATURES WITH CLARITY, SUCH AS REGLET COUNTER-FLASHINGS AND TERMINATION BARS WHERE ROOF MEMBRANE FLASHINGS TERMINATE ON SIDE WALLS. REFER TO WALL SECTION AND ROOF EDGE DETAILS FOR DETAILS AND INFORMATION RELATED TO THESE CONDITIONS.
15. PAINT ALL EXPOSED LINTELS TO MATCH ADJACENT WALL.

EXTERIOR ELEVATION SYMBOLS LEGEND

- CAM — CAMERA; SEE SECURITY DWGS
- SPK — SPEAKER; SEE COMMUNICATION DWGS
- CR — CARD READER; SEE TECHNOLOGY DWGS
- A1 — VIDEO INTERCOM; SEE TECHNOLOGY DWGS
- DO — VIDEO INTERCOM; SEE TECHNOLOGY DWGS
- H/S — FIRE ALARM HORN/ STROBE; SEE FIRE ALARM DWGS
- FA — RED FIRE ALARM BEACON; SEE FIRE ALARM DWGS
- SEC — AMBER SECURITY BEACON; SEE FIRE ALARM AND TECHNOLOGY DRAWINGS
- SPR — SPRINKLER ALARM BEACON AND BELL; SEE FIRE ALARM DWGS
- H — HOSE BIB; SEE PLUMBING DWGS
- PENDANT MOUNT LIGHT FIXTURE, SEE ELEC. DWGS. LOCATE SL4 AT 8'-0" ABOVE LEVEL 1 TO B.O. FIXTURE. LOCATE SL5 AT 14'-0" ABOVE LEVEL 1 TO B.O. FIXTURE.
- WALL SCONCE LIGHT FIXTURE, SEE ELEC. DWGS. LOCATE LEVEL 1 SC1 AT 7'-8" ABOVE LEVEL 1 TO B.O. FIXTURE. LOCATE LEVEL 2 SC-1 AT 4'-0" ABOVE LEVEL 2 TO B.O. FIXTURE
- 3/4" — EXTENT OF BRICK VENEER PROJECTING BEYOND THE DATUM FACE OF BRICK VENEER PLANE. SEE PROJECT DETAILS AND SPECIAL BRICK SHAPES FOR ASSEMBLIES

ELEVATION SYMBOLS LEGEND

- CAM — CAMERA; SEE SECURITY DWGS
- SPK — SPEAKER; SEE COMMUNICATION DWGS
- CR — CARD READER; SEE TECHNOLOGY DWGS
- A1 — VIDEO INTERCOM; SEE TECHNOLOGY DWGS
- DO — DOOR OPENER; SEE SECURITY DWGS
- H/S — FIRE ALARM HORN/STROBE; SEE FIRE ALARM DWGS
- FA — RED FIRE ALARM BEACON; SEE FIRE ALARM DWGS
- SEC — AMBER SECURITY BEACON; SEE FIRE ALARM AND TECHNOLOGY DRAWINGS
- SPR — SPRINKLER ALARM BEACON AND BELL; SEE FIRE ALARM DWGS
- H — HOSE BIB; SEE PLUMBING DWGS
- PENDANT MOUNT LIGHT FIXTURE, SEE ELEC. DWGS. LOCATE SL4 AT 8'-0" ABOVE LEVEL 1 TO B.O. FIXTURE. LOCATE SL5 AT 14'-0" ABOVE LEVEL 1 TO B.O. FIXTURE.
- WALL SCONCE LIGHT FIXTURE, SEE ELEC. DWGS. LOCATE LEVEL 1 SC1 AT 7'-8" ABOVE LEVEL 1 TO B.O. FIXTURE. LOCATE LEVEL 2 SC-1 AT 4'-0" ABOVE LEVEL 2 TO B.O. FIXTURE
- 3/4" — EXTENT OF BRICK VENEER PROJECTING BEYOND THE DATUM FACE OF BRICK VENEER PLANE. SEE PROJECT DETAILS AND SPECIAL BRICK SHAPES FOR ASSEMBLIES

EXTERIOR MATERIALS LEGEND

- BRICK VENEER
- CAST STONE
- COMPOSITE SIDING
- CORRUGATED METAL PANEL (SIDING AND EQUIPMENT SCREENS)
- COMPOSITE SHINGLE
- ALUMINUM DIAMOND PLATE
- METAL PANEL / MCM PANEL
- VISION PANEL - OPERABLE

DORE + WHITTIER

MASSACHUSETTS
260 MERRIMAC STREET BUILDING 7, 2ND FLOOR
NEWBURYPORT, MA 01950
P: (978) 499-2999

VERMONT
212 BATTERY STREET
BURLINGTON, VT 05401
P: (802) 863-1428

MEDWAY MUNICIPAL COMPLEX

120 Main Street
Medway Massachusetts 02053

PROJECT NUMBER: 25-0867

SEAL AND SIGNATURE:

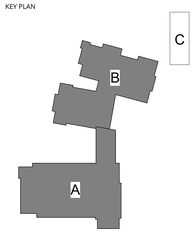
REVISIONS:

NO.	DATE	TITLE
1	09/18/2026	PEER REVIEW COMMENT RESPONSE

ISSUE TITLE AND DATE:
PERMIT DRAWINGS
7/20/2026

COPYRIGHT © 2026 by Dore & Whittier Architects, Inc. (D+W). These documents are D+W's instruments of service and as such, D+W retains all copyrights, common law, and statutory rights. Use of these documents without D+W's express written permission will result in copyright infringement.

KEY PLAN



ORIENTATION AND SCALE:

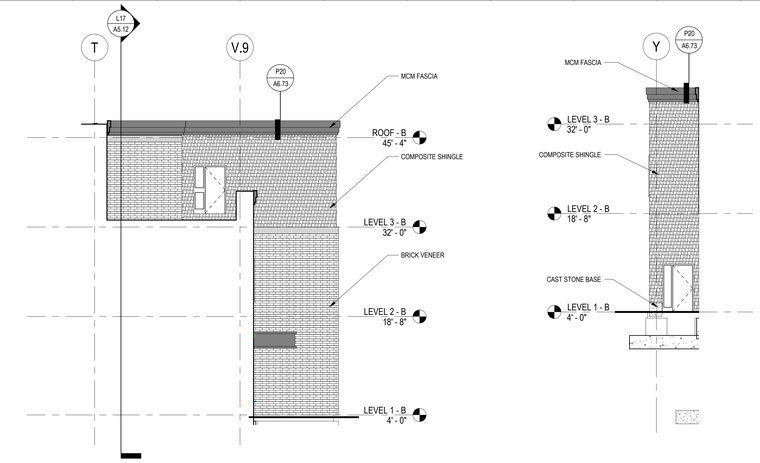
18"X24" HALF-SIZE PRINT
0 8" 16" 32"
SCALE: 1/16"=1'-0" GRAPHIC SCALE

36"X48" FULL-SIZE PRINT
0 4" 8" 16"
SCALE: 1/8"=1'-0" GRAPHIC SCALE

SHEET TITLE:
EXTERIOR ELEVATIONS

SHEET NUMBER:
A4.13

Autodesk Docs://Medway Municipal Complex/ARCH - 867 - MEDWAY MUNICIPAL COMPLEX.rvt
9/17/2026 9:39:31 PM



S27 EXTERIOR ELEVATION - POLICE EAST 2
1/8" = 1'-0"

S21 EXTERIOR ELEVATION - POLICE WEST 2
1/8" = 1'-0"

ELEVATION SYMBOLS LEGEND

CAM	CAMERA; SEE SECURITY DWGS	H/S	FIRE ALARM HORN/STROBE; SEE FIRE ALARM DWGS
SPK	SPEAKER; SEE COMMUNICATION DWGS	FA	RED FIRE ALARM BEACON; SEE FIRE ALARM DWGS
CR	CARD READER; SEE TECHNOLOGY DWGS	SEC	AMBER SECURITY BEACON; SEE FIRE ALARM AND TECHNOLOGY DRAWINGS
A1	VIDEO INTERCOM; SEE TECHNOLOGY DWGS	SPR	SPRINKLER ALARM BEACON AND BELL; SEE FIRE ALARM DWGS
DO	DOOR OPENER; SEE SECURITY DWGS	H	HOSE BIB; SEE PLUMBING DWGS

PENDANT MOUNT LIGHT FIXTURE, SEE ELEC. DWGS. LOCATE SL4 AT 8'-0" ABOVE LEVEL 1 TO B.O. FIXTURE. LOCATE SL5 AT 14'-0" ABOVE LEVEL 1 TO B.O. FIXTURE.

WALL SCONCE LIGHT FIXTURE, SEE ELEC. DWGS. LOCATE LEVEL 1 SC1 AT 7'-8" ABOVE LEVEL 1 TO B.O. FIXTURE. LOCATE LEVEL 2 SC-1 AT 4'-0" ABOVE LEVEL 2 TO B.O. FIXTURE

3/4" = 1'-0" EXTENT OF BRICK VENEER PROJECTING BEYOND THE DATUM FACE OF BRICK VENEER PLANE. SEE PROJECT DETAILS AND SPECIAL BRICK SHAPES FOR ASSEMBLIES

EXTERIOR ELEVATION SYMBOLS LEGEND

CAM	CAMERA; SEE SECURITY DWGS	H/S	FIRE ALARM HORN/ STROBE; SEE FIRE ALARM DWGS
SPK	SPEAKER; SEE COMMUNICATION DWGS	FA	RED FIRE ALARM BEACON; SEE FIRE ALARM DWGS
CR	CARD READER; SEE TECHNOLOGY DWGS	SE	AMBER SECURITY BEACON; SEE FIRE ALARM AND TECHNOLOGY DRAWINGS
A1	VIDEO INTERCOM; SEE TECHNOLOGY DWGS	SP	SPRINKLER ALARM BEACON AND BELL; SEE FIRE ALARM DWGS
D	VIDEO INTERCOM; SEE TECHNOLOGY DWGS	H	HOSE BIB; SEE PLUMBING DWGS

PENDANT MOUNT LIGHT FIXTURE, SEE ELEC. DWGS. LOCATE SL4 AT 8'-0" ABOVE LEVEL 1 TO B.O. FIXTURE. LOCATE SL5 AT 14'-0" ABOVE LEVEL 1 TO B.O. FIXTURE.

WALL SCONCE LIGHT FIXTURE, SEE ELEC. DWGS. LOCATE LEVEL 1 SC1 AT 7'-8" ABOVE LEVEL 1 TO B.O. FIXTURE. LOCATE LEVEL 2 SC-1 AT 4'-0" ABOVE LEVEL 2 TO B.O. FIXTURE

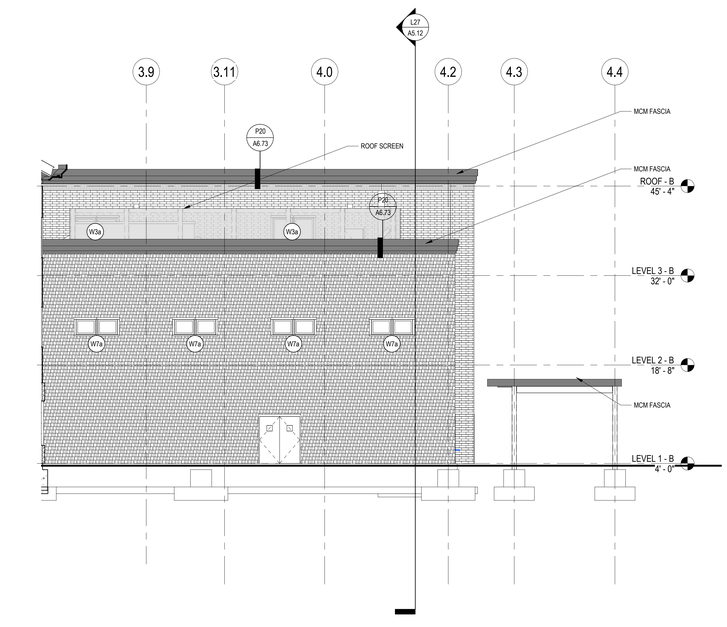
3/4" = 1'-0" EXTENT OF BRICK VENEER PROJECTING BEYOND THE DATUM FACE OF BRICK VENEER PLANE. SEE PROJECT DETAILS AND SPECIAL BRICK SHAPES FOR ASSEMBLIES

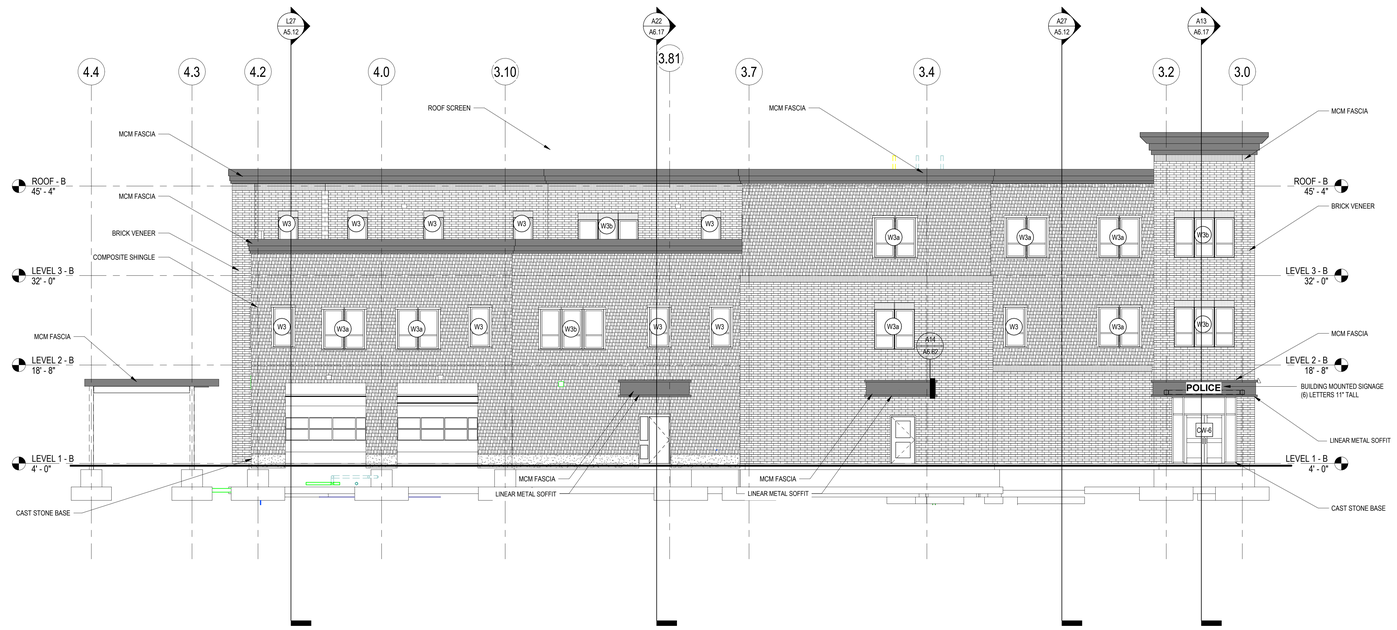
EXTERIOR MATERIALS LEGEND

- BRICK VENEER
- COMPOSITE SIDING
- COMPOSITE SHINGLE
- METAL PANEL / MCM PANEL
- CAST STONE
- CORRUGATED METAL PANEL (SIDING AND EQUIPMENT SCREENS)
- ALUMINUM DIAMOND PLATE
- VISION PANEL - OPERABLE

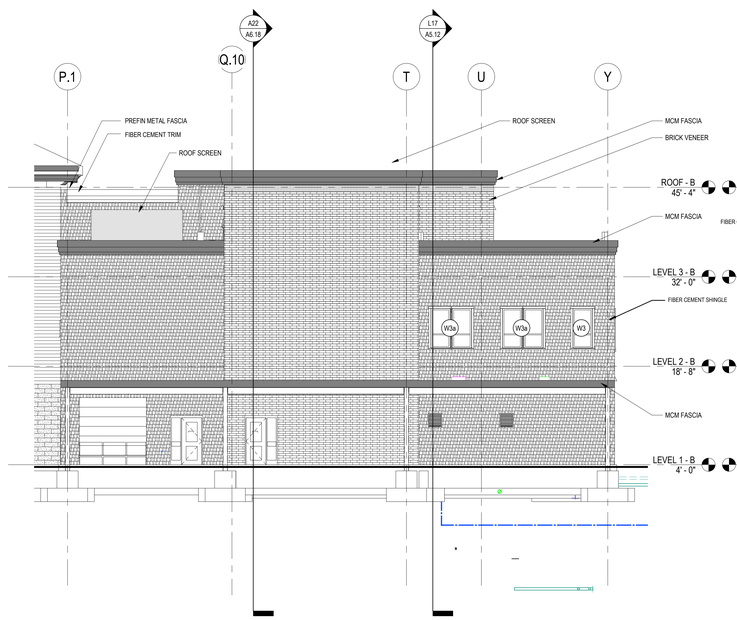
EXTERIOR ELEVATION GENERAL NOTES

1. EXTERIOR ELEVATIONS ARE PROVIDED TO SHOW THE GENERAL ARRANGEMENT OF EXTERIOR WALL FINISH MATERIALS. REFER TO WALL SECTIONS AND DETAILS FOR DETAILED DESCRIPTION OF CONSTRUCTION.
2. LINE OF GRADE INDICATED IS APPROXIMATE – REFER TO CIVIL / LANDSCAPE GRADING PLANS FOR GRADING INFORMATION.
3. WHERE PORTIONS OF ELEVATIONS ARE OBSCURED FROM VIEW BY FREESTANDING COLUMNS, FASCIA, ROOF EDGES, OR OTHER PROJECTING CONSTRUCTION, THE CONTRACTOR SHALL ASSUME THAT THE ADJACENT WALL FINISHES EXTEND INTO THE AREAS OBSCURED FROM VIEW, UNLESS SPECIFICALLY INDICATED AS OTHERWISE IN BUILDING AND WALL SECTIONS.
4. DIMENSIONAL INFORMATION PROVIDED RELATIVE TO MASONRY VENEER IS BASED ON NOMINAL FULL INCH MASONRY COURSING.
5. REFER TO ROOF PLAN FOR DESCRIPTION OF ROOFING SYSTEMS AND MATERIALS.
6. REFER TO CURTAIN-WALL TYPES AND DETAILS FOR INFORMATION RELATED TO CURTAIN-WALL, GLAZING TYPES, INSTALLATION, AND TRIM AT OPENINGS.
7. REFER TO WINDOW TYPES AND DETAILS FOR INFORMATION RELATED TO WINDOWS, OPERABLE SASH, GLAZING TYPES, INSTALLATION, AND TRIM AT OPENINGS.
8. REFER TO LOUVER TYPES AND DETAILS FOR INFORMATION RELATED TO LOUVER OPENINGS, SIZES, INSTALLATION, AND TRIM AT OPENINGS.
9. REFER TO BUILDING AND WALL SECTIONS FOR HEIGHT OF MASONRY COURSING AND TOP OF MASONRY ELEVATIONS.
10. PROVIDE MASONRY VENEER CONTROL JOINTS WHERE INDICATED IN ELEVATIONS. IN ADDITION, PROVIDE CONTROL JOINTS AT THE FOLLOWING LOCATIONS:
    a. ON ONE SIDE OF AN OUTWARD BUILDING CORNER WITHIN 2 '-4" OF THE CORNER.
    b. AT EACH INWARD BUILDING CORNER.
    c. WHERE THE HEIGHT OF THE FACADE MASONRY VENEER CHANGES.
    d. WHERE THE METHOD OF SUPPORT FOR MASONRY VENEER CHANGES, SUCH AS AT ENDS OF RELIEVING ANGLES OR STRUCTURAL LINTELS SUPPORTED FROM ROOF STRUCTURE.
    e. ON UNINTERRUPTED SPANS OF MASONRY VENEER AT MAXIMUM 24 '-0" SPACING.
11. SEALANT AND BACKER ROD AT MASONRY VENEER CONTROL JOINTS SHALL BE PROVIDED AND INSTALLED BY THE WATERPROOFING / JOINT SEALANT SUB-CONTRACTOR.
12. WHERE LOOSE LINTELS CROSS CONTROL JOINTS, PROVIDE BOND-BREAK FABRIC WRAP OF LINTEL END AT PORTION OF LINTEL EXTENDING PAST CONTROL JOINT.
13. WHERE MASONRY VENEER MATERIAL CHANGES OCCUR, INCLUDING FROM BRICK TO CMU OR PRECAST CONCRETE, PROVIDE A BOND BREAK SEPARATOR BETWEEN COURSES.
14. ELEVATIONS MAY NOT SHOW ALL BUILDING FEATURES WITH CLARITY, SUCH AS REGLET COUNTER-FLASHINGS AND TERMINATION BARS WHERE ROOF MEMBRANE FLASHINGS TERMINATE ON SIDE WALLS. REFER TO WALL SECTION AND ROOF EDGE DETAILS FOR DETAILS AND INFORMATION RELATED TO THESE CONDITIONS.
15. PAINT ALL EXPOSED LINTELS TO MATCH ADJACENT WALL.

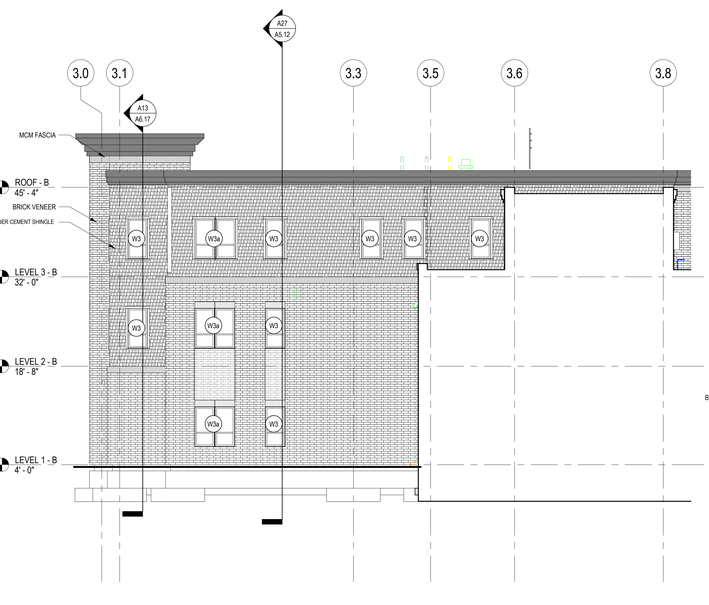


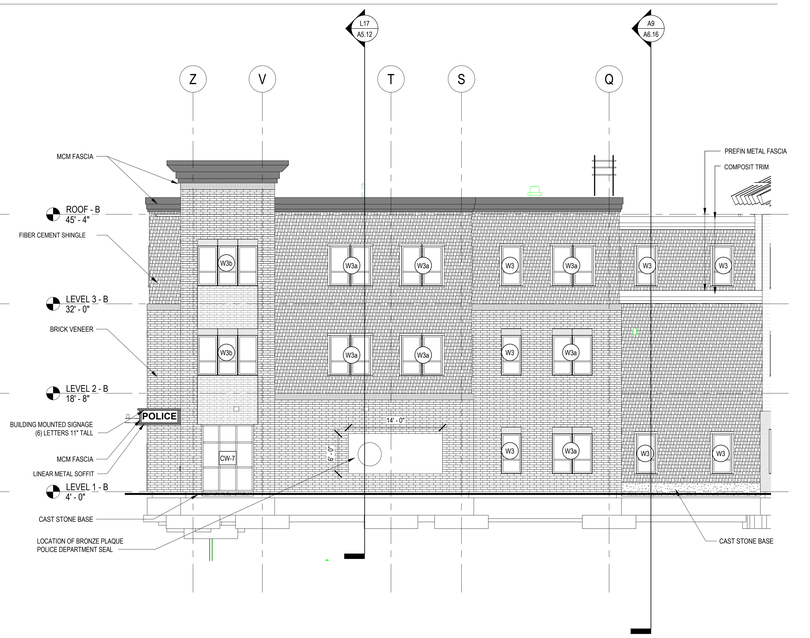


J27 EXTERIOR ELEVATION - POLICE SOUTH
1/8" = 1'-0"



J18 EXTERIOR ELEVATION - POLICE NORTH
1/8" = 1'-0"





A27 EXTERIOR ELEVATION - POLICE EAST
1/8" = 1'-0"

A18 EXTERIOR ELEVATION - POLICE SOUTH 2
1/8" = 1'-0"

A10 EXTERIOR ELEVATION - POLICE WEST
1/8" = 1'-0"

DORE + WHITTIER

MASSACHUSETTS
260 MERRIMAC STREET BUILDING 7, 2ND FLOOR
NEWBURYPORT, MA 01950
P: (978) 499-2999

VERMONT
212 BATTERY STREET
BURLINGTON, VT 05401
P: (802) 863-1428

MEDWAY MUNICIPAL COMPLEX

120 Main Street
Medway Massachusetts 02053

PROJECT NUMBER: 25-0867

SEAL AND SIGNATURE:

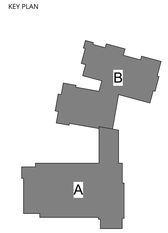
REVISIONS:

NO.	DATE	TITLE
1	09/18/2026	PEER REVIEW COMMENT RESPONSE

ISSUE TITLE AND DATE:
PERMIT DRAWINGS
7/20/2026

COPYRIGHT © 2026 by Dore & Whittier Architects, Inc. (D+W). These documents are D+W's instruments of service and as such, D+W retains all copyrights, common law, and statutory rights. Use of these documents without D+W's express written permission will result in copyright infringement.

KEY PLAN



ORIENTATION AND SCALE:

18"X24" HALF-SIZE PRINT
0 8' 16' 32'
SCALE: 1/16"=1'-0" GRAPHIC SCALE

36"X48" FULL-SIZE PRINT
0 4' 8' 16'
SCALE: 1/8"=1'-0" GRAPHIC SCALE

SHEET TITLE:
EXTERIOR ELEVATIONS

SHEET NUMBER:
A4.14

Autodesk Docs://Medway Municipal Complex/ARCH - 867 - MEDWAY MUNICIPAL COMPLEX.rvt
9/17/2026 9:39:49 PM